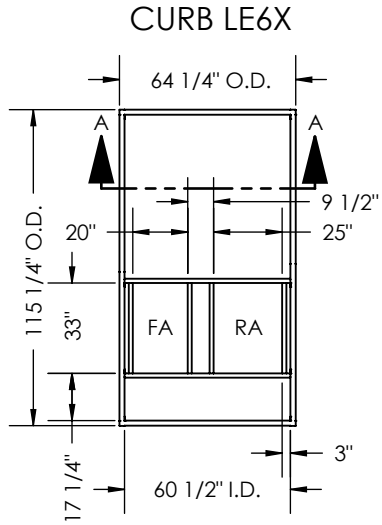

TOP VIEW

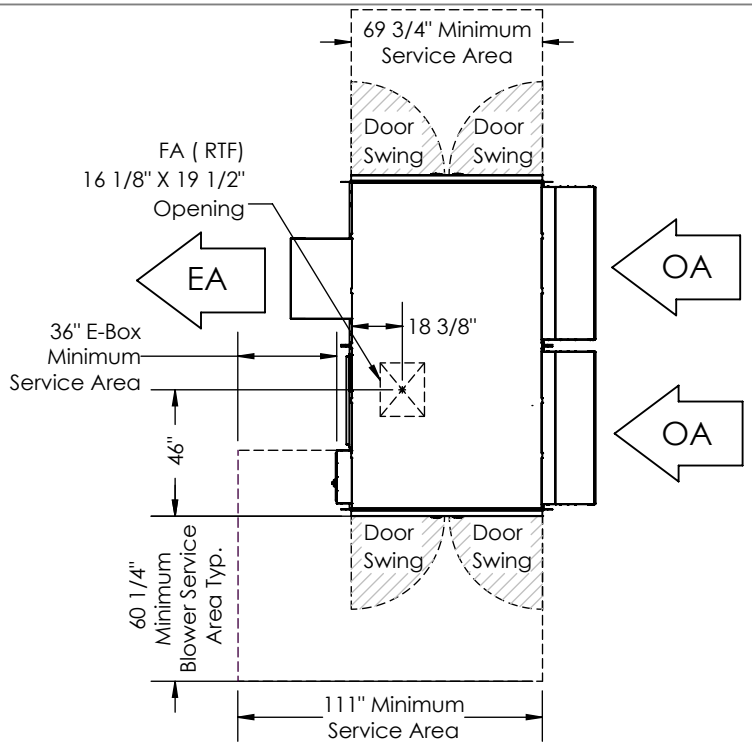

TOP VIEW

ABBREVIATIONS
EA: Exhaust Air to outside
OA: Outside Air intake
RA: Room Air to be exhausted
FA: Fresh Air to inside
RTF: Rooftop Vertical FA Only
RTH: Rooftop Horizontal RA & FA

INSTALLATION ORIENTATION
Unit must be installed in orientation shown.

NOTE:
1. UNLESS OTHERWISE SPECIFIED, DIMENSIONS ARE ROUNDED TO THE NEAREST EIGHTH OF AN INCH.

2. SPECIFICATIONS MAY BE SUBJECT TO CHANGE WITHOUT NOTICE.

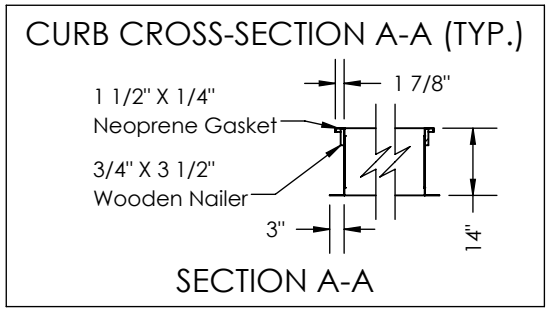

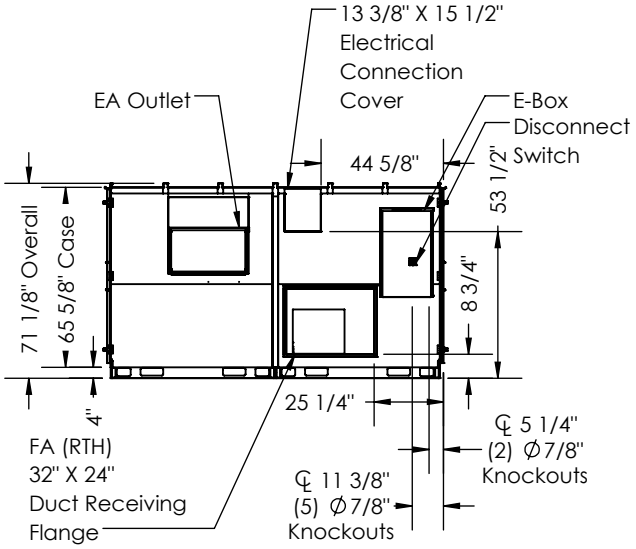

LEFT VIEW

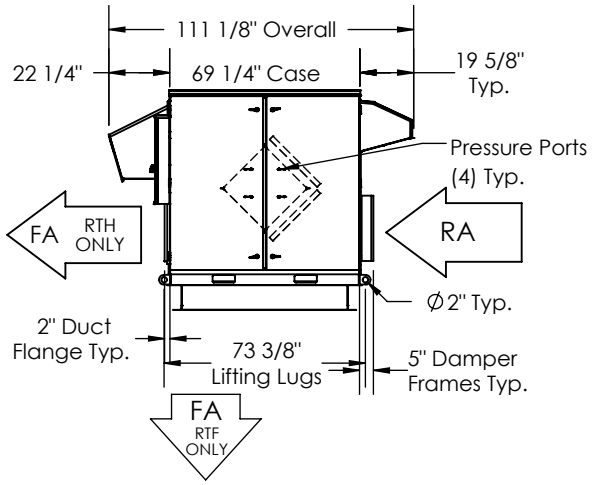

FRONT VIEW

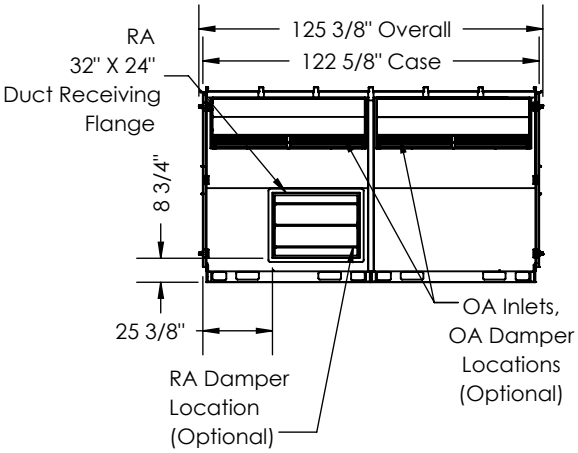

RIGHT VIEW

Model: LE6X RTH/RTF
Drawing Type: Unit Dimension
Version: MAY18

RenewAire®
Energy Recovery Ventilation