RenewAire®
Energy Recovery Ventilation

ERV

LE SERIES

COMMERCIAL ERV CATALOG

AUGUST 2021

RENEWAIRE.COM | 800.627.4499

BECAUSE INDOOR
AIR QUALITY MATTERS

As buildings become more airtight due to better construction methodologies, the need for increased and balanced ventilation is critical. Without it, internally generated contaminants accumulate and cause **deficient indoor air quality** (IAQ), which leads to significant health and cognitive problems for occupants. Industry standards are changing to combat deficient IAQ, and codes that adopt these new standards are driving the application of Energy Recovery in ventilation strategies. Deficient IAQ is a serious problem, especially considering:

- On average, Americans spend 90% of their time indoors
- The EPA found that indoor air may be 2-5 times—and occasionally greater than 100 times—more polluted than outdoor air
- The EPA ranks indoor air pollutants as a top-five environmental health risk to occupants

ADVERSE EFFECTS OF **DEFICIENT IAQ**

Deficient IAQ has numerous adverse effects on the health and cognitive function of building occupants.

Health problems: Acute allergies, headaches, coughs, asthma, skin irritations and breathing difficulties, as well as chronic illnesses such as cancer, liver disease, kidney damage and nervous-system failure.

Cognitive impairment: Studies by the Harvard School of Public Health and the Lawrence Berkeley National Laboratory found that carbon dioxide (CO_2)—an indoor air contaminant—negatively impacted thinking and decision-making at levels commonly found inside homes and buildings.

ABOUT RENEWAIRE

For over 30 years, **RenewAire has been a pioneer in enhancing IAQ** in commercial and residential buildings of every size. This is achieved while maximizing sustainability through our fifth-generation, enthalpic-core, static-plate Energy Recovery Ventilators (ERVs) & Dedicated Outdoor Air Systems (DOAS) that **optimize energy efficiency**, lower capital costs and **decrease operational expenses** by reducing HVAC loads therefore minimizing equipment needs, resulting in significant energy savings. Our ERVs/DOAS are competitively priced, simple to install, easy to use and maintain, have a quick payback and enjoy the industry's best warranty with the lowest claims due to long-term reliability. In 2010, RenewAire joined the Soler & Palau (S&P) Ventilation Group, providing direct access to the latest in energy-efficient air-moving technologies. For more information, visit: **renewaire.com.**

TABLE OF CONTENTS

LE SERIES - Commercial Unitary ERV

RENEWAIRE ERVs
ACHIEVE SUSTAINABLE IAQ

RenewAire is a **pioneer in enhancing IAQ** while maximizing sustainability through enthalpic-core, static-plate Energy Recovery Ventilators (ERVs) that **optimize energy efficiency, lower costs by reducing HVAC loads and therefore reduce environmental footprints**. Our ERV technology preconditions incoming air with the otherwise-wasted energy (heat and humidity) of the exhaust air going out—all while the airstreams are kept physically separate as certified by the Air-Conditioning, Heating, and Refrigeration Institute (AHRI) for low-to-zero Exhaust Air Transfer Ratio (EATR) at typical static pressure differentials. As the pioneer of static-plate core technology in North America, RenewAire is the largest ERV producer in the USA.

OPTIMIZING ENERGY EFFICIENCY

Energy efficiency is optimized by preconditioning the outside air coming in with the **otherwise-wasted heat and humidity** of the exhaust air going out. This exchange of energy moderates temperatures and moisture, decreases HVAC equipment needs, drives operational efficiencies and conserves energy.

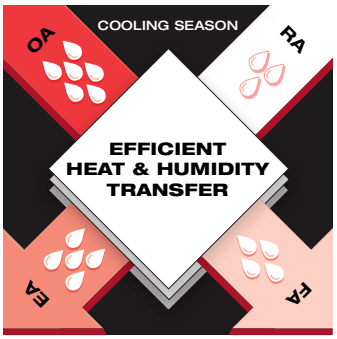

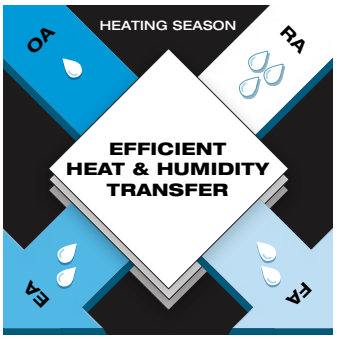

REDUCING HVAC LOADS

RenewAire technology reduces **HVAC loads** during both winter and summer. In turn, HVAC equipment capacities can be decreased, thus furnaces and air conditioners can be smaller. This process ensures efficient operations and keeps both energy use and costs low, while maintaining high-level IAQ.

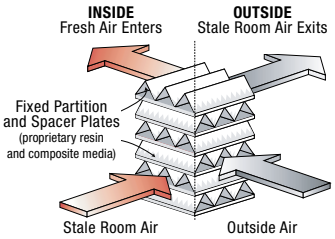

MINIMIZING ENVIRONMENTAL IMPACT

The combination of less energy used and HVAC loads being reduced conserves resources. Further, our Madison, WI plant is 100% powered by renewable wind energy, and is one of the few buildings worldwide to be LEED® Gold and Green Globes certified, as well as having achieved ENERGY STAR Building status. This commitment to sustainable manufacturing minimizes our overall production and distribution environmental footprint.

WHY RENEWAIRE IS PREFERRED

BEST VALUE

- Priced competitively against other energy recovery ventilation technology
- Due to competitive pricing and decreased costs, payback is short and ROI is maximized
- Contractors and OEMs can pass these significant savings along to their customers
- End users can benefit from a significantly reduced operating cost

RELIABLE OPERATION

- Built-to-last ERVs have lifespans of 25+ years and operate consistently year-round in every extreme, including frost-free performance in all but the most severe winter climates
- High-efficiency core operates dry in all conditions, meaning no condensate pans
- An industry-leading ten-year warranty for the static-plate core, two-year warranty for commercial products and a five-year warranty for residential products
- Superior product quality results in paramount reliability and longevity

HIGHEST-QUALITY INDOOR AIR

- Stale indoor air is replaced with fresh, conditioned and filtered air from the outside, resulting in Enhanced IAQ by removing harmful contaminants
- Airstreams do not mix and pollutants are not transferred across partition plates
- No biocide used; material does not promote biological growth
- Moderated temperatures and humidity maintain a comfortable indoor environment

OPTIMIZED ENERGY EFFICIENCY

- Efficient heat and humidity transfer recaptures up to 70-80% of the energy exhausted in the airstream
- Energy that's otherwise wasted by conventional ventilation systems (such as bath fans) is reused, thus dramatically reducing monthly operation costs
- Energy-efficient operation decreases HVAC loads, which cuts down on energy use and costs
- The hotter or colder the climate, the more energy is recovered

HIGHLY CERTIFIED

- RenewAire products are highly certified. See individual catalog submittal for certification details:
  - UL
  - cUL
  - ETL
  - HVI
  - AHRI

LE 6XINH

Energy Recovery Ventilator
Standard

Intertek

INDOOR UNIT

LE6XINV shown

Energy Recovery Core is AHRI Certified®

AHRI CERTIFIED®
www.ahridirectory.org
Air-to-Air ERV
AHRI Standard 1060
Energy Recovery COMPONENT is certified. Actual performance in packaged equipment may vary.

SPECIFICATIONS

Ventilation Type:
Static plate, heat and humidity transfer

Typical Airflow Range: 1,500-6,600 CFM

AHRI 1060 Certified Core: Six L125-G5

Standard Features:
TEFC Premium efficiency motors
Motor starters
Non-fused disconnect
24 VAC transformer/relay package
Cross-core differential pressure ports

Filters: Total qty. 12, MERV 8: 20" x 25" x 2"

Unit Weight:
Modular (per module) 943-1,367 lbs., varies by option(s)
Assembled (1-piece) 1,975-2,630 lbs., varies by option(s)

Max. Shipping Dimensions & Weight (on pallet):
Modular (2-modules) 80" L x 90" W x 78" H
Module 1 - 1,508 lbs., Module 2 - 1,406 lbs.
Assembled (1-piece) 160" L x 90" W x 78" H - 2,630 lbs.

Motor(s):
Qty. 2, Belt drive blower/standard motor packages with choice of adjustable sheaves for low, medium or high blower speed (see table below)

Options:
Spring vibration isolators
Onboard variable frequency drives (VFDs) - both airstreams
Shaft grounding ring on motors with VFDs
Fused disconnect
Integrated programmable controls - enhanced, premium
Class 1 low leakage motorized isolation dampers - OA, RA or both airstreams
Qty. 2, Factory mounted filter alarms - both airstreams
Double wall construction
Exterior paint - white, custom colors

Accessories:
Filters - MERV 13, 2" or 4"; MERV 8, 4" (shipped loose)
Automatic balancing damper - 4", 5", 6"
Digital time clock - wall mount (TC7D-W), in exterior enclosure (TC7D-E)
Carbon dioxide sensor/control - wall mount (CO2-W), duct mount (CO2-D)
IAQ sensor - wall mount (IAQ-W), duct mount (IAQ-D)
Motion occupancy sensor/control - ceiling mount (MC-C), wall mount (MC-W)
Smoke Detector - duct mount (SD-D)
Electric duct heater - EK series (1–175 kW)
Indirect gas-fired duct furnace - GH series (50-400 MBH), installed downstream of any fans

AIRFLOW PERFORMANCE

Airflow CFM		External Static Pressure (in.w.g.)																		
		0.00		0.25		0.50		0.75		1.00		1.25		1.50		1.75		2.00		
		BHP	RPM	BHP	RPM	BHP	RPM	BHP	RPM	BHP	RPM	BHP	RPM	BHP	RPM	BHP	RPM	BHP	RPM	
										3 HP LOW SPEED				3 HP MED SPEED				3 HP HIGH SPEED		
1500										0.9	820	1.1	900	1.3	960	1.4	1020	1.6	1080	
2000										1.1	850	1.3	930	1.5	990	1.7	1050	1.9	1100	
2500								1.1	770	1.3	870	1.5	950	1.7	1010	1.9	1060	2.1	1110	
3000								1.4	800	1.6	890	1.8	960	2.0	1020	2.2	1080	2.4	1130	
3500								1.7	840	1.9	910	2.1	980	2.4	1040	2.6	1090	2.8	1140	
3750						1.7	780	1.9	860	2.1	920	2.3	990	2.6	1040	2.8	1100	3.1	1150	5 HP MED SPEED
4000						1.9	810	2.1	880	2.3	940	2.6	1000	2.8	1050	3.0	1110	3.3	1160	
4250				2.0	780	2.2	840	2.3	900	2.6	960	2.8	1010	3.0	1060	3.3	1120	3.6	1170	
4500	3 HP LOW SPEED	2.1	770	2.2	820	2.4	870	2.6	920	2.8	970	3.1	1030	3.3	1080	3.6	1130	3.9	1180	
4750		2.4	810	2.5	850	2.7	900	2.9	950	3.1	990	3.3	1040	3.6	1090	3.9	1140	4.2	1190	5 HP HIGH SPEED
5000		2.7	850	2.8	890	3.0	930	3.2	970	3.4	1010	3.7	1060	3.9	1110	4.2	1150	4.5	1210	
5250		3.0	880	3.2	920	3.4	960	3.5	990	3.8	1030	4.0	1080	4.3	1120	4.6	1170	4.9	1220	
5500	5 HP LOW SPEED	3.4	910	3.5	950	3.7	980	3.9	1020	4.1	1060	4.4	1100	4.7	1140	5.0	1190	5.4	1240	
5750		3.8	950	3.9	980	4.1	1010	4.3	1040	4.5	1080	4.8	1120	5.1	1160	5.4	1200	5.8	1260	
6000		4.2	980	4.3	1000	4.5	1030	4.7	1070	5.0	1100	5.2	1140	5.5	1180	5.9	1220	6.3	1270	
6250		4.6	1000	4.8	1030	5.0	1060	5.2	1090	5.4	1120	5.7	1160	6.0	1190	6.3	1240	6.8	1290	
6500		5.1	1030	5.2	1060	5.4	1080	5.6	1110	5.9	1140	6.2	1170	6.5	1210	6.8	1250	7.3	1300	
6600		5.3	1040	5.4	1070	5.6	1090	5.8	1120	6.1	1150	6.4	1180	6.7	1220	7.0	1260	7.5	1310	
		7.5 HP LOW SPEED												7.5 HP MED SPEED						

Note: Airflow performance includes effect of clean, standard filter supplied with unit.

ELECTRICAL DATA

Standard Electrical Specifications							Optional Factory Installed VFD Electrical Specifications		
HP	Volts	HZ	Phase	FLA per motor	Min. Cir. Amps	Max. Overcurrent Protection Device	FLA per motor	Min. Cir. Amps	Max. Overcurrent Protection Device
3.0	208-230	60	Single	14.7-14	33.1	40	9.38-8.48	40.2	45
3.0	208-230	60	Three	9.38-8.48	21.1	25	9.38-8.48	23.2	25
	460	60	Three	4.24	9.5	15	4.24	10.5	15
	575	60	Three	3.3	7.4	15	3.3	8.2	15
5.0	208-230	60	Three	14.5-13.4	32.6	45	14.5-13.4	35.9	45
	460	60	Three	6.7	15.1	20	6.7	16.6	20
	575	60	Three	5.3	11.9	15	5.3	13.1	15
7.5	208-230	60	Three	21.0-19.0	47.3	60	21.0-19.0	52.0	60
	460	60	Three	9.5	21.4	25	9.5	23.5	25
	575	60	Three	7.6	17.1	20	7.6	18.8	20

RenewAire® Energy Recovery Ventilation

LE6XINH Energy Recovery Ventilator Standard

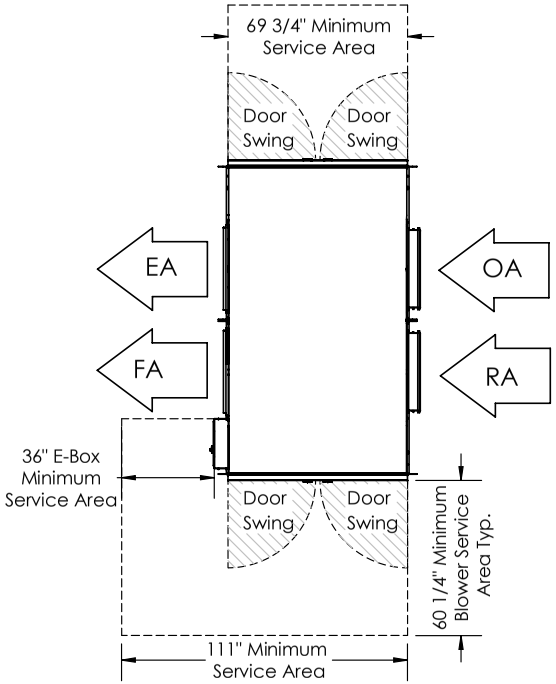

TOP VIEW

ABBREVIATIONS
EA: Exhaust Air to outside
OA: Outside Air intake
RA: Room Air to be exhausted
FA: Fresh Air to inside

INSTALLATION ORIENTATION
Unit must be installed in orientation shown.

NOTE
1.UNLESS OTHERWISE SPECIFIED, DIMENSIONS ARE ROUNDED TO THE NEAREST EIGHTH OF AN INCH.

2.SPECIFICATIONS MAY BE SUBJECT TO CHANGE WITHOUT NOTICE.

3. MIN. DUCT CLEARANCE FROM DAMPER BLADES WHEN FULLY OPENED TO BE 2". SMACNA RULES APPLY.

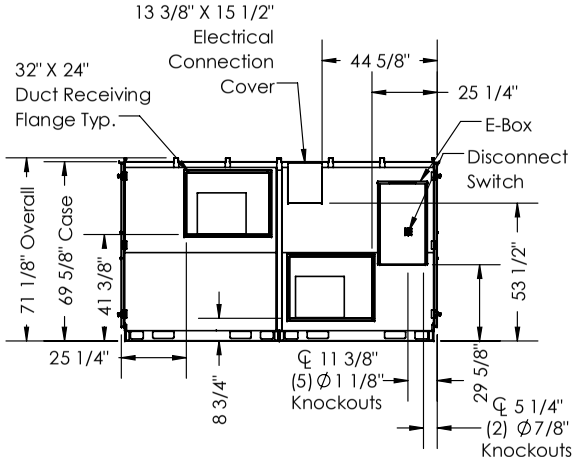

LEFT VIEW

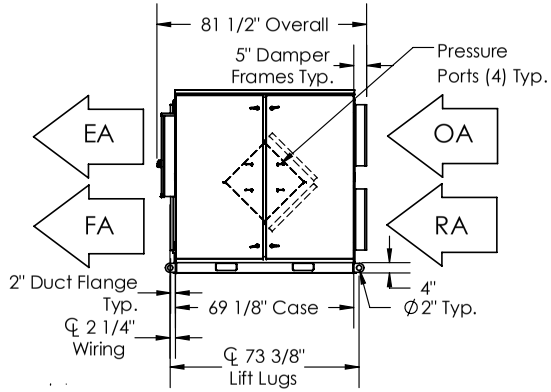

FRONT VIEW

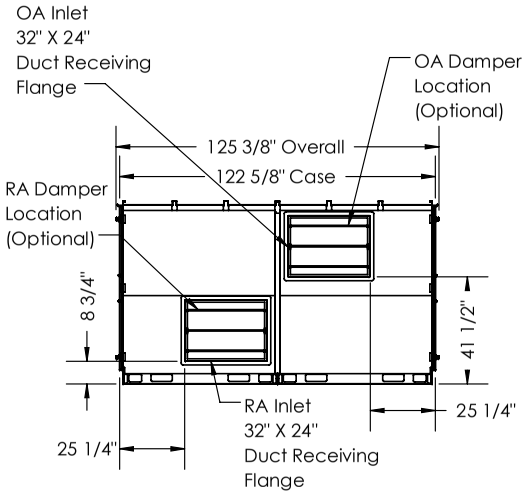

RIGHT VIEW

AIRFLOW ORIENTATION
Available as shown in dimension drawing.

UNIT MOUNTING & APPLICATION
Must be mounted as shown. RA/EA airstream can be switched with OA/FA airstream unless certain options are selected.

LE 6XINV

Energy Recovery Ventilator
Standard

Intertek

INDOOR UNIT

Energy Recovery Core is AHRI Certified®

AHRI CERTIFIED®
www.ahridirectory.org
Air-to-Air ERV
AHRI Standard 1060
Energy Recovery COMPONENT is certified. Actual performance in packaged equipment may vary.

SPECIFICATIONS

Ventilation Type:
Static plate, heat and humidity transfer

Typical Airflow Range: 1,500-6,600 CFM

AHRI 1060 Certified Core: Six L125-G5

Standard Features:
TEFC Premium efficiency motors
Motor starters
Non-fused disconnect
24 VAC transformer/relay package
Cross-core differential pressure ports

Filters: Total qty. 12, MERV 8: 20" x 25" x 2"

Unit Weight:
Modular (per module) 715-1,622 lbs., varies by option(s)
Assembled (1-piece) 1,984-2,640 lbs., varies by option(s)

Max. Shipping Dimensions & Weight (on pallet):
Modular (2-modules) 80" L x 90" W x 78" H
Module 1 - 1,763 lbs., Module 2 - 1,159 lbs.
Assembled (1-piece) 160" L x 90" W x 78" H - 2,922 lbs.

Motor(s):
Qty. 2, Belt drive blower/standard motor packages with choice of adjustable sheaves for low, medium or high blower speed (see table below)

Options:
Spring vibration isolators
Onboard variable frequency drives (VFDs) - both airstreams
Shaft grounding ring on motors with VFDs
Fused disconnect
Integrated programmable controls - enhanced, premium
Class 1 low leakage motorized isolation dampers - OA, RA or both airstreams
Qty. 2, Factory mounted filter alarms - both airstreams
Double wall construction
Exterior paint - white, custom colors

Accessories:
Filters - MERV 13, 2" or 4"; MERV 8, 4" (shipped loose)
Automatic balancing damper - 4", 5", 6"
Digital time clock - wall mount (TC7D-W), in exterior enclosure (TC7D-E)
Carbon dioxide sensor/control - wall mount (CO2-W), duct mount (CO2-D)
IAQ sensor - wall mount (IAQ-W), duct mount (IAQ-D)
Motion occupancy sensor/control - ceiling mount (MC-C), wall mount (MC-W)
Smoke Detector - duct mount (SD-D)
Electric duct heater - EK series (1–175 kW)
Indirect gas-fired duct furnace - GH series (50-400 MBH), installed downstream of any fans

AIRFLOW PERFORMANCE

Airflow CFM	External Static Pressure (in.w.g.)																				
		0.00		0.25		0.50		0.75		1.00		1.25		1.50		1.75		2.00		
		BHP	RPM	BHP	RPM	BHP	RPM	BHP	RPM	BHP	RPM	BHP	RPM	BHP	RPM	BHP	RPM	BHP	RPM	
										3 HP LOW SPEED				3 HP MED SPEED				3 HP HIGH SPEED		
1500										0.9	820	1.1	900	1.3	960	1.4	1020	1.6	1080	
2000										1.1	850	1.3	930	1.5	990	1.7	1050	1.9	1100	
2500								1.1	770	1.3	870	1.5	950	1.7	1010	1.9	1060	2.1	1110	
3000								1.4	800	1.6	890	1.8	960	2.0	1020	2.2	1080	2.4	1130	
3500								1.7	840	1.9	910	2.1	980	2.4	1040	2.6	1090	2.8	1140	
3750						1.7	780	1.9	860	2.1	920	2.3	990	2.6	1040	2.8	1100	3.1	1150	5 HP MED SPEED
4000						1.9	810	2.1	880	2.3	940	2.6	1000	2.8	1050	3.0	1110	3.3	1160	
4250				2.0	780	2.2	840	2.3	900	2.6	960	2.8	1010	3.0	1060	3.3	1120	3.6	1170	
4500	3 HP LOW SPEED	2.1	770	2.2	820	2.4	870	2.6	920	2.8	970	3.1	1030	3.3	1080	3.6	1130	3.9	1180	
4750		2.4	810	2.5	850	2.7	900	2.9	950	3.1	990	3.3	1040	3.6	1090	3.9	1140	4.2	1190	5 HP HIGH SPEED
5000		2.7	850	2.8	890	3.0	930	3.2	970	3.4	1010	3.7	1060	3.9	1110	4.2	1150	4.5	1210	
5250		3.0	880	3.2	920	3.4	960	3.5	990	3.8	1030	4.0	1080	4.3	1120	4.6	1170	4.9	1220	
5500	5 HP LOW SPEED	3.4	910	3.5	950	3.7	980	3.9	1020	4.1	1060	4.4	1100	4.7	1140	5.0	1190	5.4	1240	
5750		3.8	950	3.9	980	4.1	1010	4.3	1040	4.5	1080	4.8	1120	5.1	1160	5.4	1200	5.8	1260	
6000		4.2	980	4.3	1000	4.5	1030	4.7	1070	5.0	1100	5.2	1140	5.5	1180	5.9	1220	6.3	1270	
6250		4.6	1000	4.8	1030	5.0	1060	5.2	1090	5.4	1120	5.7	1160	6.0	1190	6.3	1240	6.8	1290	
6500		5.1	1030	5.2	1060	5.4	1080	5.6	1110	5.9	1140	6.2	1170	6.5	1210	6.8	1250	7.3	1300	
6600		5.3	1040	5.4	1070	5.6	1090	5.8	1120	6.1	1150	6.4	1180	6.7	1220	7.0	1260	7.5	1310	
		7.5 HP LOW SPEED												7.5 HP MED SPEED						

Note: Airflow performance includes effect of clean, standard filter supplied with unit.

ELECTRICAL DATA

Standard Electrical Specifications							Optional Factory Installed VFD Electrical Specifications		
HP	Volts	HZ	Phase	FLA per motor	Min. Cir. Amps	Max. Overcurrent Protection Device	FLA per motor	Min. Cir. Amps	Max. Overcurrent Protection Device
3.0	208-230	60	Single	14.7-14	33.1	40	9.38-8.48	40.2	45
3.0	208-230	60	Three	9.38-8.48	21.1	25	9.38-8.48	23.2	25
	460	60	Three	4.24	9.5	15	4.24	10.5	15
	575	60	Three	3.3	7.4	15	3.3	8.2	15
5.0	208-230	60	Three	14.5-13.4	32.6	45	14.5-13.4	35.9	45
	460	60	Three	6.7	15.1	20	6.7	16.6	20
	575	60	Three	5.3	11.9	15	5.3	13.1	15
7.5	208-230	60	Three	21.0-19.0	47.3	60	21.0-19.0	52.0	60
	460	60	Three	9.5	21.4	25	9.5	23.5	25
	575	60	Three	7.6	17.1	20	7.6	18.8	20

RenewAire® Energy Recovery Ventilation

LE6XINV Energy Recovery Ventilator Standard

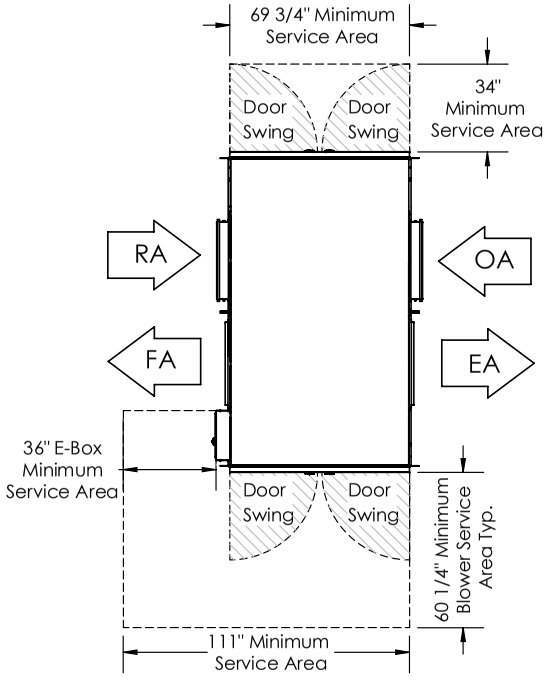

TOP VIEW

ABBREVIATIONS
EA: Exhaust Air to outside
OA: Outside Air intake
RA: Room Air to be exhausted
FA: Fresh Air to inside

INSTALLATION ORIENTATION
Unit must be installed in orientation shown.

NOTE
1.UNLESS OTHERWISE SPECIFIED, DIMENSIONS ARE ROUNDED TO THE NEAREST EIGHTH OF AN INCH.

2.SPECIFICATIONS MAY BE SUBJECT TO CHANGE WITHOUT NOTICE.

3.MIN. DUCT CLEARANCE FROM DAMPER BLADES WHEN FULLY OPENED TO BE 2". SMACNA RULES APPLY.

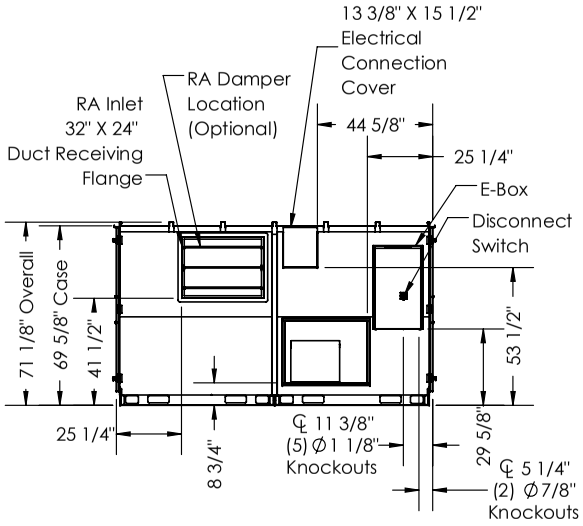

LEFT VIEW

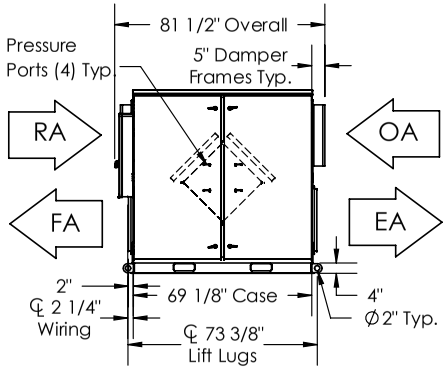

FRONT VIEW

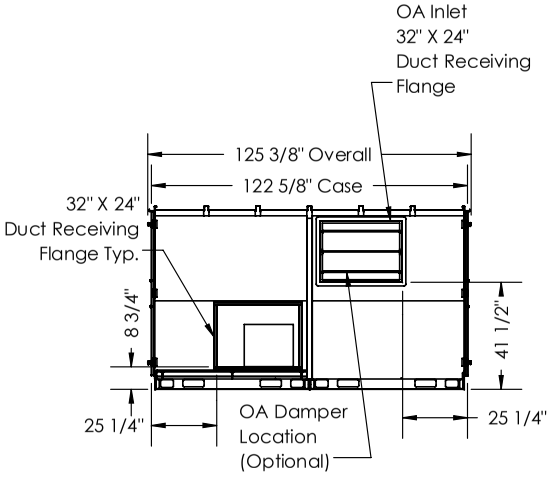

RIGHT VIEW

AIRFLOW ORIENTATION
Available as shown in dimension drawing.

UNIT MOUNTING & APPLICATION
Must be mounted as shown. RA/EA airstream can be switched with OA/FA airstream unless certain options are selected.

LE 6XRT

Energy Recovery Ventilator
Standard

Intertek

ROOFTOP UNIT

LE10XRT shown

Energy Recovery Core is AHRI Certified®

AHRI CERTIFIED®
www.ahridirectory.org
Air-to-Air ERV
AHRI Standard 1060
Energy Recovery COMPONENT is certified. Actual performance in packaged equipment may vary.

SPECIFICATIONS

Ventilation Type:
Static plate, heat and humidity transfer

Typical Airflow Range: 1,500-6,600 CFM

AHRI 1060 Certified Core: Six L125-G5

Standard Features:
TEFC Premium efficiency motors
Motor starters
Non-fused disconnect
24 VAC transformer/relay package
Cross-core differential pressure ports

Filters:
Total qty. 12, MERV 8: 20" x 25" x 2"

Unit Weight:
Modular (per module) 1,069-1,461 lbs., varies by option(s)
Assembled (1-piece) 2,086-2,753 lbs., varies by option(s)

Max. Shipping Dimensions & Weight (on pallet):
Modular (2-modules) 80" L x 90" W x 78" H
Module 1 - 1,602 lbs., Module 2 - 1,491 lbs.
Assembled (1-piece) 160" L x 90" W x 78" H - 3,035 lbs.

Motor(s):
Qty. 2, Belt drive blower/standard motor packages with choice of adjustable sheaves for low, medium or high blower speed (see table below)

Options:
Spring vibration isolators
Onboard variable frequency drives (VFDs) - both airstreams
Shaft grounding ring on motors with VFDs
Fused disconnect
Integrated programmable controls - enhanced, premium
Class 1 low leakage motorized isolation dampers - OA, RA or both airstreams
Qty. 2, Factory mounted filter alarms - both airstreams
Double wall construction
Exterior paint - white, custom colors

Accessories:
Filters - MERV 13, 2" or 4"; MERV 8, 4" (shipped loose)
Automatic balancing damper - 4", 5", 6"
Roof curb - standard 14"
Curb wind clip
Engineered combo curb for Carrier RTU
Engineered combo curb for Trane RTU
Digital time clock - wall mount (TC7D-W), in exterior enclosure (TC7D-E)
Carbon dioxide sensor/control - wall mount (CO2-W), duct mount (CO2-D)
IAQ sensor - wall mount (IAQ-W), duct mount (IAQ-D)
Motion occupancy sensor/control - ceiling mount (MC-C), wall mount (MC-W)
Smoke Detector - duct mount (SD-D)
Electric duct heater - EK series (1–175 kW); designed for indoor ductwork installation only
Indirect gas-fired duct furnace - GH series (50-400 MBH), installed downstream of any fans

AIRFLOW PERFORMANCE

Airflow CFM		External Static Pressure (in.w.g.)																		
		0.00		0.25		0.50		0.75		1.00		1.25		1.50		1.75		2.00		
		BHP	RPM	BHP	RPM	BHP	RPM	BHP	RPM	BHP	RPM	BHP	RPM	BHP	RPM	BHP	RPM	BHP	RPM	
										3 HP LOW SPEED		3 HP MED SPEED				3 HP HIGH SPEED				
1500										0.9	840	1.1	920	1.5	990	1.9	1060	2.4	1120	
2000								0.9	770	1.1	860	1.4	940	1.7	1010	2.2	1080	2.6	1140	
2500								1.1	800	1.3	880	1.7	950	2.0	1030	2.4	1090	2.9	1150	
3000								1.4	830	1.7	900	2.0	970	2.3	1040	2.7	1110	3.1	1170	5 HP MED
3500						1.6	800	1.8	870	2.1	930	2.4	1000	2.7	1060	3.1	1120	3.5	1190	
3750				1.6	760	1.8	820	2.0	890	2.3	950	2.6	1010	2.9	1070	3.3	1130	3.7	1190	
4000				1.8	790	2.0	850	2.3	910	2.5	970	2.8	1030	3.2	1090	3.5	1150	3.9	1200	5 HP HIGH SPEED
4250	3 HP LOW SPEED	1.9	770	2.1	820	2.3	880	2.5	930	2.8	990	3.1	1040	3.4	1100	3.7	1160	4.1	1210	
4500		2.2	800	2.4	850	2.6	900	2.8	960	3.1	1010	3.4	1060	3.7	1110	4.0	1170	4.3	1230	
4750		2.5	840	2.7	880	2.9	930	3.1	980	3.4	1030	3.7	1080	4.0	1130	4.3	1180	4.6	1240	
5000		2.8	870	3.0	910	3.2	960	3.5	1000	3.7	1050	4.0	1100	4.3	1150	4.6	1200	4.9	1250	
5250	5 HP LOW SPEED	3.2	910	3.4	940	3.6	990	3.8	1030	4.1	1070	4.3	1120	4.6	1170	4.9	1220	5.3	1270	
5500		3.6	940	3.8	970	4.0	1010	4.2	1050	4.5	1090	4.7	1140	5.0	1180	5.3	1230	5.6	1290	
5750		4.0	970	4.2	1000	4.4	1040	4.6	1080	4.9	1120	5.1	1160	5.4	1200	5.7	1250	6.0	1300	
6000		4.4	1000	4.6	1030	4.8	1070	5.0	1100	5.3	1140	5.5	1180	5.8	1230	6.1	1270	6.4	1330	
6250		4.9	1030	5.1	1060	5.3	1090	5.5	1130	5.7	1160	6.0	1200	6.2	1250	6.5	1300	6.9	1350	
6500		5.3	1060	5.5	1090	5.7	1120	6.0	1150	6.2	1190	6.4	1230	6.7	1270	7.0	1320	7.4	1380	
6600		5.5	1070	5.7	1100	5.9	1130	6.1	1160	6.4	1200	6.6	1240	6.9	1280	7.2	1330	7.5	1390	
		7.5 HP LOW SPEED								7.5 HP MED SPEED										

Note: Airflow performance includes effect of clean, standard filter supplied with unit.

ELECTRICAL DATA

Standard Electrical Specifications							Optional Factory Installed VFD Electrical Specifications		
HP	Volts	HZ	Phase	FLA per motor	Min. Cir. Amps	Max. Overcurrent Protection Device	FLA per motor	Min. Cir. Amps	Max. Overcurrent Protection Device
3.0	208-230	60	Single	14.7-14	33.1	40	9.38-8.48	40.2	45
3.0	208-230	60	Three	9.38-8.48	21.1	25	9.38-8.48	23.2	25
	460	60	Three	4.24	9.5	15	4.24	10.5	15
	575	60	Three	3.3	7.4	15	3.3	8.2	15
5.0	208-230	60	Three	14.5-13.4	32.6	45	14.5-13.4	35.9	45
	460	60	Three	6.7	15.1	20	6.7	16.6	20
	575	60	Three	5.3	11.9	15	5.3	13.1	15
7.5	208-230	60	Three	21.0-19.0	47.3	60	21.0-19.0	52.0	60
	460	60	Three	9.5	21.4	25	9.5	23.5	25
	575	60	Three	7.6	17.1	20	7.6	18.8	20

RenewAire® Energy Recovery Ventilation

LE6XRT (RTV/RTR) Energy Recovery Ventilator Standard

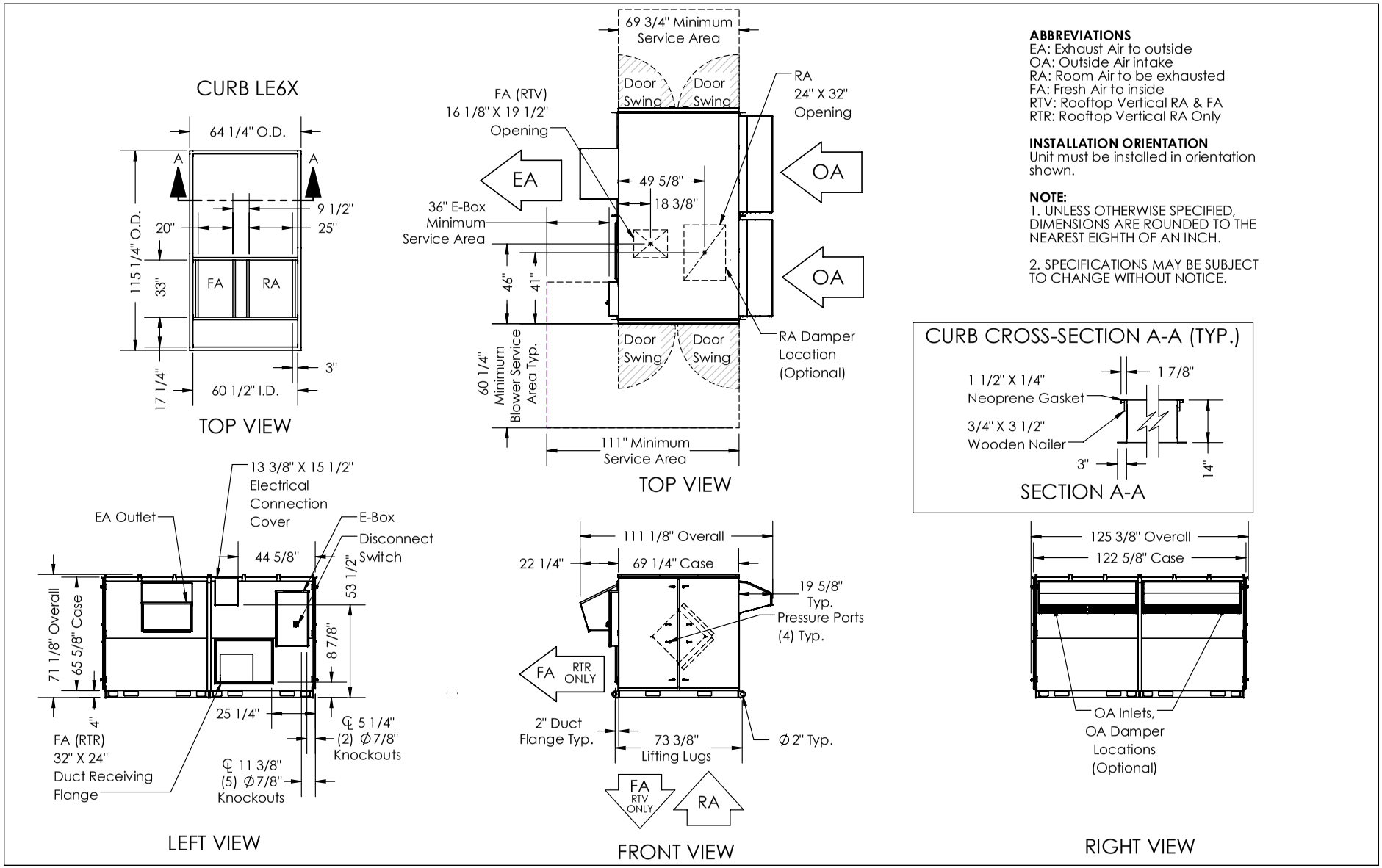

ABBREVIATIONS
EA: Exhaust Air to outside
OA: Outside Air intake
RA: Room Air to be exhausted
FA: Fresh Air to inside
RTV: Rooftop Vertical RA & FA
RTR: Rooftop Vertical RA Only

INSTALLATION ORIENTATION
Unit must be installed in orientation shown.

NOTE:
1. UNLESS OTHERWISE SPECIFIED, DIMENSIONS ARE ROUNDED TO THE NEAREST EIGHTH OF AN INCH.

2. SPECIFICATIONS MAY BE SUBJECT TO CHANGE WITHOUT NOTICE.

AIRFLOW ORIENTATION
Available as shown:

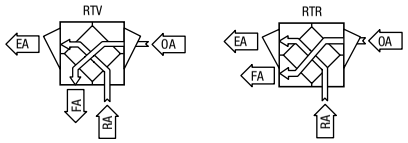

UNIT MOUNTING & APPLICATION
Must be mounted as shown. Airstreams can not be switched.

LE6XRT (RTH/RTF) Energy Recovery Ventilator Standard

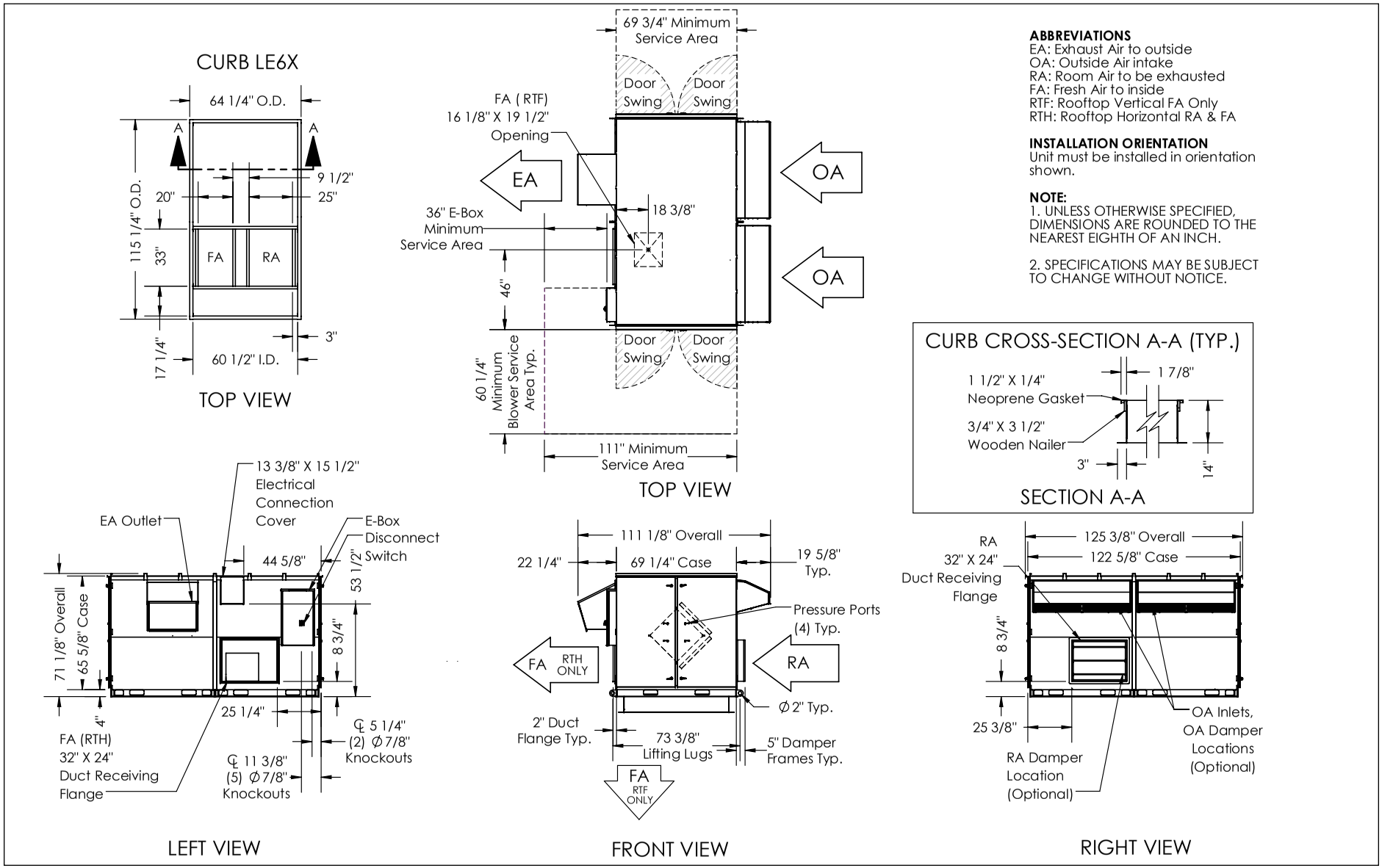

ABBREVIATIONS
EA: Exhaust Air to outside
OA: Outside Air intake
RA: Room Air to be exhausted
FA: Fresh Air to inside
RTF: Rooftop Vertical FA Only
RTH: Rooftop Horizontal RA & FA

INSTALLATION ORIENTATION
Unit must be installed in orientation shown.

NOTE:
1. UNLESS OTHERWISE SPECIFIED, DIMENSIONS ARE ROUNDED TO THE NEAREST EIGHTH OF AN INCH.

2. SPECIFICATIONS MAY BE SUBJECT TO CHANGE WITHOUT NOTICE.

AIRFLOW ORIENTATION

Available as shown:

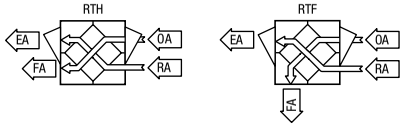

UNIT MOUNTING & APPLICATION

Must be mounted as shown. Airstreams can not be switched.

RenewAire Energy Recovery Ventilation

THIS PAGE IS INTENTIONALLY LEFT BLANK.

LE 8XINH

Energy Recovery Ventilator
Standard

Intertek

INDOOR UNIT

LE8XINV shown

Energy Recovery Core is AHRI Certified®

AHRI CERTIFIED®
www.ahridirectory.org
Air-to-Air ERV
AHRI Standard 1060
Energy Recovery COMPONENT is certified. Actual performance in packaged equipment may vary.

SPECIFICATIONS

Ventilation Type:
Static plate, heat and humidity transfer

Typical Airflow Range: 2,000-8,800 CFM

AHRI 1060 Certified Core: Eight L125-G5

Standard Features:
TEFC Premium efficiency motors
Motor starters
Non-fused disconnect
24 VAC transformer/relay package
Cross-core differential pressure ports

Filters: Total qty. 16, MERV 8: 20" x 25" x 2"

Unit Weight:
Modular (per module) 1,214-1,672 lbs., varies by option(s)
Assembled (1-piece) 2,479-3,279 lbs., varies by option(s)

Max. Shipping Dimensions & Weight (on pallet):
Modular (2-modules) 100" L x 90" W x 78" H
Module 1 - 1,852 lbs., Module 2 - 1,789 lbs.
Assembled (1-piece) 200" L x 90" W x 78" H - 3,638 lbs.

Motor(s):
Qty. 2, Belt drive blower/standard motor packages with choice of adjustable sheaves for low, medium or high blower speed (see table below)

Options:
Spring vibration isolators
Onboard variable frequency drives (VFDs) - both airstreams
Shaft grounding ring on motors with VFDs
Fused disconnect
Integrated programmable controls - enhanced, premium
Class 1 low leakage motorized isolation dampers - OA, RA or both airstreams
Qty. 2, Factory mounted filter alarms - both airstreams
Double wall construction
Exterior paint - white, custom colors

Accessories:
Filters - MERV 13, 2" or 4"; MERV 8, 4" (shipped loose)
Automatic balancing damper - 4", 5", 6"
Digital time clock - wall mount (TC7D-W), in exterior enclosure (TC7D-E)
Carbon dioxide sensor/control - wall mount (CO2-W), duct mount (CO2-D)
IAQ sensor - wall mount (IAQ-W), duct mount (IAQ-D)
Motion occupancy sensor/control - ceiling mount (MC-C), wall mount (MC-W)
Smoke Detector - duct mount (SD-D)
Electric duct heater - EK series (1–175 kW)
Indirect gas-fired duct furnace - GH series (50-400 MBH), installed downstream of any fans

AIRFLOW PERFORMANCE

Airflow CFM	External Static Pressure (in.w.g.)																			
		0.00		0.25		0.50		0.75		1.00		1.25		1.50		1.75		2.00		
		BHP	RPM	BHP	RPM	BHP	RPM	BHP	RPM	BHP	RPM	BHP	RPM	BHP	RPM	BHP	RPM	BHP	RPM	
								3 HP LOW SPEED				3 HP MED SPEED		3 HP HIGH SPEED						
2000								1.0	680	1.3	790	1.5	870	1.8	940	2.0	1000	2.2	1060	
3000						1.1	640	1.4	740	1.7	820	2.0	890	2.3	960	2.6	1020	2.9	1070	
4000						1.6	710	1.9	790	2.2	860	2.6	920	2.9	990	3.2	1040	3.6	1100	5 HP HIGH SPEED
4500				1.5	660	1.8	740	2.2	810	2.5	880	2.9	940	3.2	1000	3.6	1060	4.0	1110	
5000				1.7	690	2.1	770	2.5	840	2.8	900	3.2	960	3.6	1020	4.0	1070	4.5	1130	
5500	3 HP LOW SPEED	1.7	650	2.0	730	2.4	800	2.8	860	3.2	930	3.6	980	4.0	1040	4.5	1090	4.9	1140	
6000		1.9	690	2.3	760	2.7	830	3.1	890	3.6	950	4.0	1010	4.5	1060	5.0	1110	5.5	1160	7.5 HP
6250		2.1	710	2.5	780	2.9	840	3.3	910	3.8	960	4.3	1020	4.7	1070	5.2	1120	5.7	1170	7.5 HP HIGH SPEED
6500		2.3	720	2.7	790	3.1	860	3.6	920	4.0	980	4.5	1030	5.0	1080	5.5	1130	6.0	1180	
6750		2.4	740	2.9	810	3.3	870	3.8	930	4.3	990	4.8	1040	5.3	1100	5.8	1140	6.3	1190	
7000		2.6	760	3.1	830	3.5	890	4.0	950	4.5	1000	5.0	1060	5.6	1110	6.1	1160	6.6	1200	
7250		2.8	780	3.3	850	3.7	910	4.3	960	4.8	1020	5.3	1070	5.8	1120	6.4	1170	7.0	1210	
7500		3.0	800	3.5	860	4.0	920	4.5	980	5.0	1030	5.6	1080	6.2	1130	6.7	1180	7.3	1220	
7750	5 HP LOW SPEED	3.2	820	3.7	880	4.2	940	4.8	990	5.3	1050	5.9	1100	6.5	1140	7.1	1190			
8000		3.5	840	4.0	900	4.5	960	5.1	1010	5.6	1060	6.2	1110	6.8	1160	7.4	1200			
8250		3.7	860	4.2	920	4.8	970	5.4	1030	5.9	1080	6.5	1120	7.1	1170					
8500		4.0	880	4.5	930	5.1	990	5.7	1040	6.3	1090	6.9	1140	7.5	1180					
8800		4.3	900	4.9	960	5.5	1010	6.1	1060	6.7	1110	7.3	1150							
				5 HP MED SPEED		7.5 HP LOW SPEED		7.5 HP MED SPEED												

Note: Airflow performance includes effect of clean, standard filter supplied with unit.

ELECTRICAL DATA

Standard Electrical Specifications							Optional Factory Installed VFD Electrical Specifications		
HP	Volts	HZ	Phase	FLA per motor	Min. Cir. Amps	Max. Overcurrent Protection Device	FLA per motor	Min. Cir. Amps	Max. Overcurrent Protection Device
3.0	208-230	60	Single	14.7-14	33.1	40	9.38-8.48	40.2	45
3.0	208-230	60	Three	9.38-8.48	21.1	25	9.38-8.48	23.2	25
	460	60	Three	4.24	9.5	15	4.24	10.5	15
	575	60	Three	3.3	7.4	15	3.3	8.2	15
5.0	208-230	60	Three	14.5-13.4	32.6	45	14.5-13.4	35.9	45
	460	60	Three	6.7	15.1	20	6.7	16.6	20
	575	60	Three	5.3	11.9	15	5.3	13.1	15
7.5	208-230	60	Three	21.0-19.0	47.3	60	21.0-19.0	52.0	60
	460	60	Three	9.5	21.4	25	9.5	23.5	25
	575	60	Three	7.6	17.1	20	7.6	18.8	20

RenewAire® Energy Recovery Ventilation

LE8XINH Energy Recovery Ventilator Standard

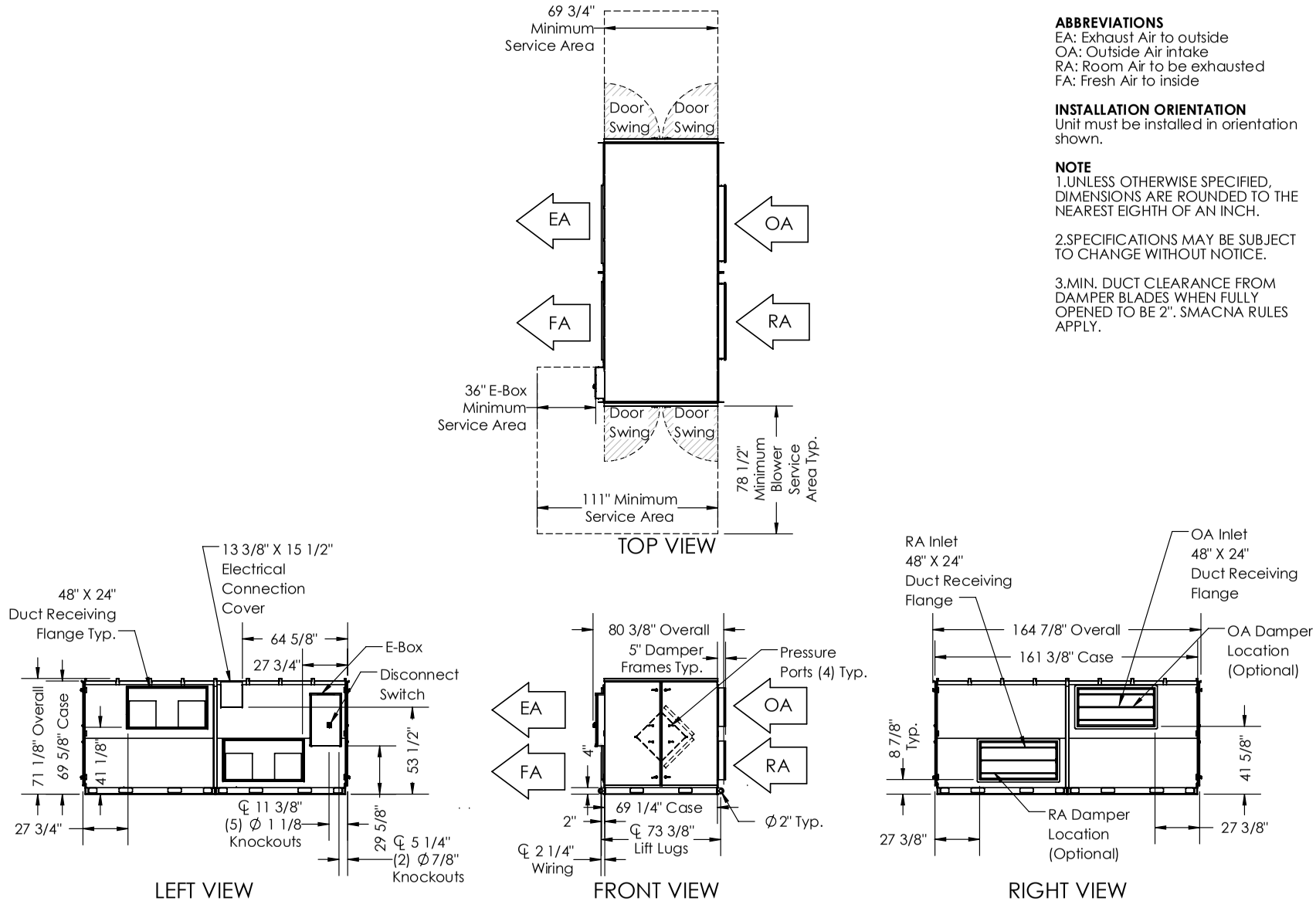

ABBREVIATIONS
EA: Exhaust Air to outside
OA: Outside Air intake
RA: Room Air to be exhausted
FA: Fresh Air to inside

INSTALLATION ORIENTATION
Unit must be installed in orientation shown.

NOTE
1.UNLESS OTHERWISE SPECIFIED, DIMENSIONS ARE ROUNDED TO THE NEAREST EIGHTH OF AN INCH.

2.SPECIFICATIONS MAY BE SUBJECT TO CHANGE WITHOUT NOTICE.

3.MIN. DUCT CLEARANCE FROM DAMPER BLADES WHEN FULLY OPENED TO BE 2". SMACNA RULES APPLY.

AIRFLOW ORIENTATION
Available as shown in dimension drawing.

UNIT MOUNTING & APPLICATION
Must be mounted as shown. RA/EA airstream can be switched with OA/FA airstream unless certain options are selected.

LE 8XINV

Energy Recovery Ventilator
Standard

Intertek

INDOOR UNIT

Energy Recovery Core is AHRI Certified®

AHRI CERTIFIED®
www.ahridirectory.org
Air-to-Air ERV
AHRI Standard 1060
Energy Recovery COMPONENT is certified. Actual performance in packaged equipment may vary.

SPECIFICATIONS

Ventilation Type:
Static plate, heat and humidity transfer

Typical Airflow Range: 2,000-8,800 CFM

AHRI 1060 Certified Core: Eight L125-G5

Standard Features:
TEFC Premium efficiency motors
Motor starters
Non-fused disconnect
24 VAC transformer/relay package
Cross-core differential pressure ports

Filters: Total qty. 16, MERV 8: 20" x 25" x 2"

Unit Weight:
Modular (per module) 918-1,984 lbs., varies by option(s)
Assembled (1-piece) 2,495-3,295 lbs., varies by option(s)

Max. Shipping Dimensions & Weight (on pallet):
Modular (2-modules) 100" L x 90" W x 78" H
Module 1 - 2,164 lbs., Module 2 - 1,493 lbs.
Assembled (1-piece) 200" L x 90" W x 78" H - 3,654 lbs.

Motor(s):
Qty. 2, Belt drive blower/standard motor packages with choice of adjustable sheaves for low, medium or high blower speed (see table below)

Options:
Spring vibration isolators
Onboard variable frequency drives (VFDs) - both airstreams
Shaft grounding ring on motors with VFDs
Fused disconnect
Integrated programmable controls - enhanced, premium
Class 1 low leakage motorized isolation dampers - OA, RA or both airstreams
Qty. 2, Factory mounted filter alarms - both airstreams
Double wall construction
Exterior paint - white, custom colors

Accessories:
Filters - MERV 13, 2" or 4"; MERV 8, 4" (shipped loose)
Automatic balancing damper - 4", 5", 6"
Digital time clock - wall mount (TC7D-W), in exterior enclosure (TC7D-E)
Carbon dioxide sensor/control - wall mount (CO2-W), duct mount (CO2-D)
IAQ sensor - wall mount (IAQ-W), duct mount (IAQ-D)
Motion occupancy sensor/control - ceiling mount (MC-C), wall mount (MC-W)
Smoke Detector - duct mount (SD-D)
Electric duct heater - EK series (1–175 kW)
Indirect gas-fired duct furnace - GH series (50-400 MBH), installed downstream of any fans

AIRFLOW PERFORMANCE

Airflow CFM	External Static Pressure (in.w.g.)																			
		0.00		0.25		0.50		0.75		1.00		1.25		1.50		1.75		2.00		
		BHP	RPM	BHP	RPM	BHP	RPM	BHP	RPM	BHP	RPM	BHP	RPM	BHP	RPM	BHP	RPM	BHP	RPM	
								3 HP LOW SPEED				3 HP MED SPEED		3 HP HIGH SPEED						
2000								1.0	680	1.3	790	1.5	870	1.8	940	2.0	1000	2.2	1060	
3000						1.1	640	1.4	740	1.7	820	2.0	890	2.3	960	2.6	1020	2.9	1070	
4000						1.6	710	1.9	790	2.2	860	2.6	920	2.9	990	3.2	1040	3.6	1100	5 HP HIGH SPEED
4500				1.5	660	1.8	740	2.2	810	2.5	880	2.9	940	3.2	1000	3.6	1060	4.0	1110	
5000				1.7	690	2.1	770	2.5	840	2.8	900	3.2	960	3.6	1020	4.0	1070	4.5	1130	
5500	3 HP LOW SPEED	1.7	650	2.0	730	2.4	800	2.8	860	3.2	930	3.6	980	4.0	1040	4.5	1090	4.9	1140	
6000		1.9	690	2.3	760	2.7	830	3.1	890	3.6	950	4.0	1010	4.5	1060	5.0	1110	5.5	1160	7.5 HP
6250		2.1	710	2.5	780	2.9	840	3.3	910	3.8	960	4.3	1020	4.7	1070	5.2	1120	5.7	1170	7.5 HP HIGH SPEED
6500		2.3	720	2.7	790	3.1	860	3.6	920	4.0	980	4.5	1030	5.0	1080	5.5	1130	6.0	1180	
6750		2.4	740	2.9	810	3.3	870	3.8	930	4.3	990	4.8	1040	5.3	1100	5.8	1140	6.3	1190	
7000		2.6	760	3.1	830	3.5	890	4.0	950	4.5	1000	5.0	1060	5.6	1110	6.1	1160	6.6	1200	
7250		2.8	780	3.3	850	3.7	910	4.3	960	4.8	1020	5.3	1070	5.8	1120	6.4	1170	7.0	1210	
7500		3.0	800	3.5	860	4.0	920	4.5	980	5.0	1030	5.6	1080	6.2	1130	6.7	1180	7.3	1220	
7750	5 HP LOW SPEED	3.2	820	3.7	880	4.2	940	4.8	990	5.3	1050	5.9	1100	6.5	1140	7.1	1190			
8000		3.5	840	4.0	900	4.5	960	5.1	1010	5.6	1060	6.2	1110	6.8	1160	7.4	1200			
8250		3.7	860	4.2	920	4.8	970	5.4	1030	5.9	1080	6.5	1120	7.1	1170					
8500		4.0	880	4.5	930	5.1	990	5.7	1040	6.3	1090	6.9	1140	7.5	1180					
8800		4.3	900	4.9	960	5.5	1010	6.1	1060	6.7	1110	7.3	1150							
				5 HP MED SPEED		7.5 HP LOW SPEED		7.5 HP MED SPEED												

Note: Airflow performance includes effect of clean, standard filter supplied with unit.

ELECTRICAL DATA

Standard Electrical Specifications							Optional Factory Installed VFD Electrical Specifications		
HP	Volts	HZ	Phase	FLA per motor	Min. Cir. Amps	Max. Overcurrent Protection Device	FLA per motor	Min. Cir. Amps	Max. Overcurrent Protection Device
3.0	208-230	60	Single	14.7-14	33.1	40	9.38-8.48	40.2	45
3.0	208-230	60	Three	9.38-8.48	21.1	25	9.38-8.48	23.2	25
	460	60	Three	4.24	9.5	15	4.24	10.5	15
	575	60	Three	3.3	7.4	15	3.3	8.2	15
5.0	208-230	60	Three	14.5-13.4	32.6	45	14.5-13.4	35.9	45
	460	60	Three	6.7	15.1	20	6.7	16.6	20
	575	60	Three	5.3	11.9	15	5.3	13.1	15
7.5	208-230	60	Three	21.0-19.0	47.3	60	21.0-19.0	52.0	60
	460	60	Three	9.5	21.4	25	9.5	23.5	25
	575	60	Three	7.6	17.1	20	7.6	18.8	20

RenewAire® Energy Recovery Ventilation

LE8XINV Energy Recovery Ventilator Standard

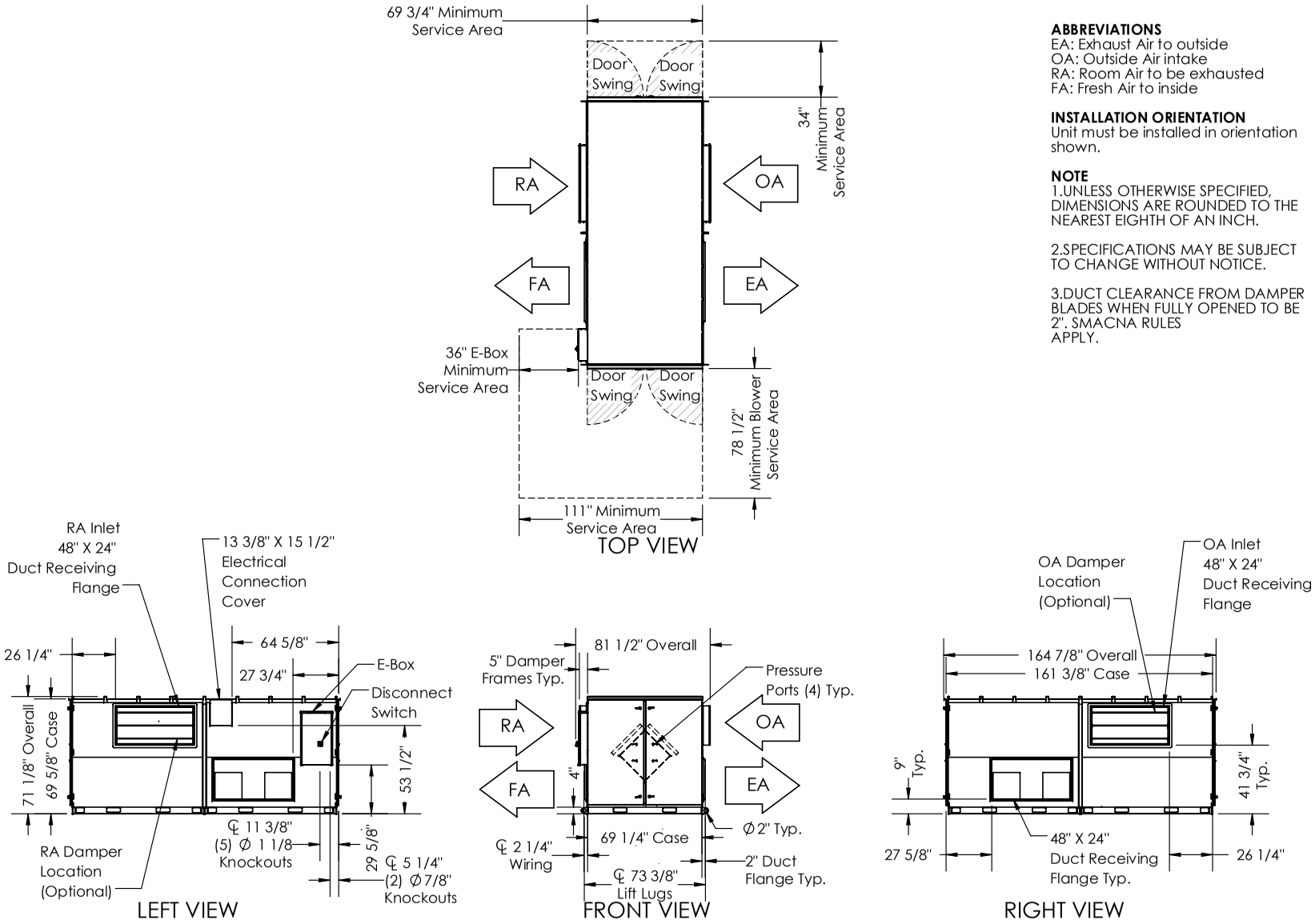

ABBREVIATIONS
EA: Exhaust Air to outside
OA: Outside Air intake
RA: Room Air to be exhausted
FA: Fresh Air to inside

INSTALLATION ORIENTATION
Unit must be installed in orientation shown.

NOTE
1.UNLESS OTHERWISE SPECIFIED, DIMENSIONS ARE ROUNDED TO THE NEAREST EIGHTH OF AN INCH.

2.SPECIFICATIONS MAY BE SUBJECT TO CHANGE WITHOUT NOTICE.

3.DUCT CLEARANCE FROM DAMPER BLADES WHEN FULLY OPENED TO BE 2". SMACNA RULES APPLY.

AIRFLOW ORIENTATION

Available as shown in dimension drawing.

UNIT MOUNTING & APPLICATION

Must be mounted as shown. RA/EA airstream can be switched with OA/FA airstream unless certain options are selected.

LE 8XRT

Energy Recovery Ventilator
Standard

Intertek

ROOFTOP UNIT

LE10XRT shown

Energy Recovery Core is AHRI Certified®

AHRI CERTIFIED®
www.ahridirectory.org
Air-to-Air ERV
AHRI Standard 1060
Energy Recovery COMPONENT is certified. Actual performance in packaged equipment may vary.

SPECIFICATIONS

Ventilation Type:
Static plate, heat and humidity transfer

Typical Airflow Range: 2,000-8,800 CFM

AHRI 1060 Certified Core: Eight L125-G5

Standard Features:
TEFC Premium efficiency motors
Motor starters
Non-fused disconnect
24 VAC transformer/relay package
Cross-core differential pressure ports

Filters: Total qty. 16, MERV 8: 20" x 25" x 2"

Unit Weight:
Modular (per module) 1,311-1,806 lbs., varies by option(s)
Assembled (1-piece) 2,631-3,453 lbs., varies by option(s)

Max. Shipping Dimensions & Weight (on pallet):
Modular (2-modules) 100" L x 90" W x 78" H
Module 1 - 1,986 lbs., Module 2 - 1,917 lbs.
Assembled (1-piece) 200" L x 90" W x 78" H - 3,812 lbs.

Motor(s):
Qty. 2, Belt drive blower/standard motor packages with choice of adjustable sheaves for low, medium or high blower speed (see table below)

Options:
Spring vibration isolators
Onboard variable frequency drives (VFDs) - both airstreams
Shaft grounding ring on motors with VFDs
Fused disconnect
Integrated programmable controls - enhanced, premium
Class 1 low leakage motorized isolation dampers - OA, RA or both airstreams
Qty. 2, Factory mounted filter alarms - both airstreams
Double wall construction
Exterior paint - white, custom colors

Accessories:
Filters - MERV 13, 2" or 4"; MERV 8, 4" (shipped loose)
Automatic balancing damper - 4", 5", 6"
Roof Curb - Standard 14"
Curb wind clip
Engineered combo curb for Carrier RTU
Engineered combo curb for Trane RTU
Digital time clock - wall mount (TC7D-W), in exterior enclosure (TC7D-E)
Carbon dioxide sensor/control - wall mount (CO2-W), duct mount (CO2-D)
IAQ sensor - wall mount (IAQ-W), duct mount (IAQ-D)
Motion occupancy sensor/control - ceiling mount (MC-C), wall mount (MC-W)
Smoke Detector - duct mount (SD-D)
Electric duct heater - EK series (1–175 kW); designed for indoor ductwork installation only
Indirect gas-fired duct furnace - GH series (50-400 MBH), installed downstream of any fans

AIRFLOW PERFORMANCE

Airflow CFM		External Static Pressure (in.w.g.)																		
		0.00		0.25		0.50		0.75		1.00		1.25		1.50		1.75		2.00		
		BHP	RPM	BHP	RPM	BHP	RPM	BHP	RPM	BHP	RPM	BHP	RPM	BHP	RPM	BHP	RPM	BHP	RPM	
								3 HP LOW SPEED				3 HP MED SPEED		3 HP HIGH SPEED						
2000						1.3	640	1.3	730	1.4	810	1.6	890	1.9	960	2.4	1030	2.9	1100	
3000						1.5	700	1.6	780	1.9	860	2.2	930	2.7	1000	3.1	1060	3.7	1130	5 HP HIGH SPEED
4000				1.6	680	1.9	760	2.2	840	2.6	910	3.0	980	3.5	1040	4.0	1100	4.6	1160	
4500				1.8	710	2.1	800	2.5	870	3.0	940	3.5	1010	4.0	1060	4.5	1120	5.1	1170	7.5 HP HIGH SPEED
5000	3 HP LOW SPEED	1.7	660	2.1	750	2.5	830	3.0	910	3.5	970	4.0	1030	4.5	1090	5.1	1140	5.6	1190	
5500		2.0	710	2.4	790	2.9	870	3.4	940	4.0	1000	4.5	1060	5.1	1110	5.6	1160	6.2	1210	
6000		2.4	750	2.9	840	3.4	910	4.0	970	4.5	1030	5.1	1090	5.7	1140	6.2	1190	6.8	1230	
6250		2.6	780	3.1	860	3.7	930	4.2	990	4.8	1050	5.4	1100	6.0	1150	6.5	1200	7.1	1240	
6500		2.8	800	3.4	880	4.0	950	4.5	1010	5.1	1060	5.7	1110	6.3	1160	6.8	1210	7.4	1250	
6750	5 HP LOW SPEED	3.1	820	3.7	900	4.3	960	4.8	1020	5.4	1080	6.0	1130	6.6	1180	7.2	1220			
7000		3.3	850	4.0	920	4.6	980	5.2	1040	5.8	1090	6.3	1140	6.9	1190	7.5	1230			
7250		3.6	870	4.3	940	4.9	1000	5.5	1060	6.1	1110	6.7	1160	7.2	1200					
7500		3.9	900	4.6	960	5.2	1020	5.8	1080	6.4	1120	7.0	1170							
7750	5 HP MED SPEED	4.3	920	4.9	980	5.6	1040	6.2	1090	6.8	1140	7.4	1180							
8000		4.6	940	5.3	1000	5.9	1060	6.5	1110	7.1	1160									
8250		5.0	970	5.7	1020	6.3	1080	6.9	1130	7.5	1170									
8500		5.4	990	6.0	1050	6.7	1100	7.3	1140											
8800		5.9	1020	6.5	1070	7.1	1120													
7.5 HP LOW SPEED				7.5 HP MED SPEED																

Note: Airflow performance includes effect of clean, standard filter supplied with unit.

ELECTRICAL DATA

Standard Electrical Specifications							Optional Factory Installed VFD Electrical Specifications		
HP	Volts	HZ	Phase	FLA per motor	Min. Cir. Amps	Max. Overcurrent Protection Device	FLA per motor	Min. Cir. Amps	Max. Overcurrent Protection Device
3.0	208-230	60	Single	14.7-14	33.1	40	9.38-8.48	40.2	45
3.0	208-230	60	Three	9.38-8.48	21.1	25	9.38-8.48	23.2	25
	460	60	Three	4.24	9.5	15	4.24	10.5	15
	575	60	Three	3.3	7.4	15	3.3	8.2	15
5.0	208-230	60	Three	14.5-13.4	32.6	45	14.5-13.4	35.9	45
	460	60	Three	6.7	15.1	20	6.7	16.6	20
	575	60	Three	5.3	11.9	15	5.3	13.1	15
7.5	208-230	60	Three	21.0-19.0	47.3	60	21.0-19.0	52.0	60
	460	60	Three	9.5	21.4	25	9.5	23.5	25
	575	60	Three	7.6	17.1	20	7.6	18.8	20

RenewAire® Energy Recovery Ventilation

LE8XRT (RTV/RTR) Energy Recovery Ventilator Standard

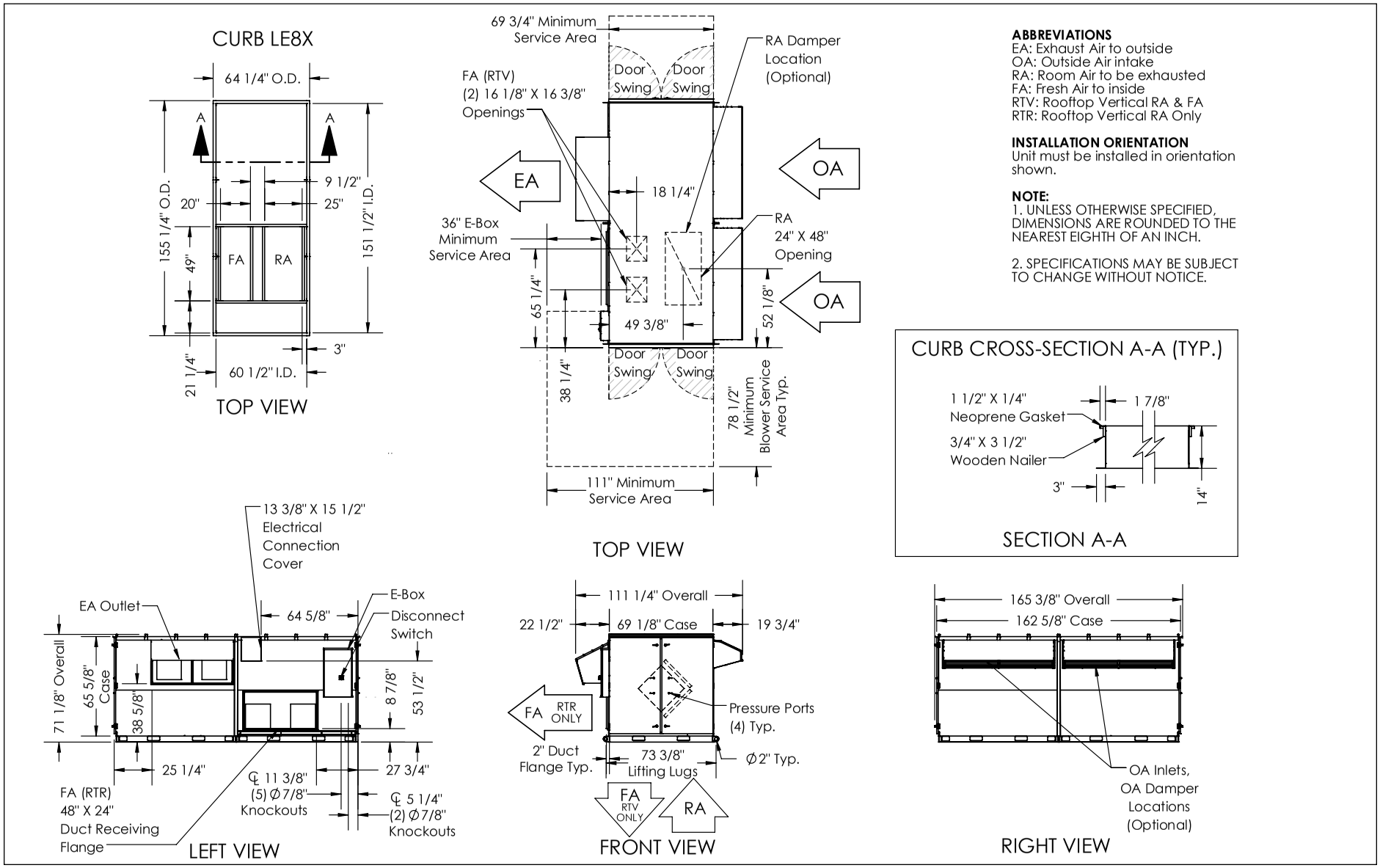

AIRFLOW ORIENTATION
Available as shown:

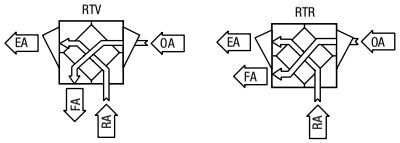

UNIT MOUNTING & APPLICATION
Must be mounted as shown. Airstreams can not be switched.

LE8XRT (RTH/RTF) Energy Recovery Ventilator Standard

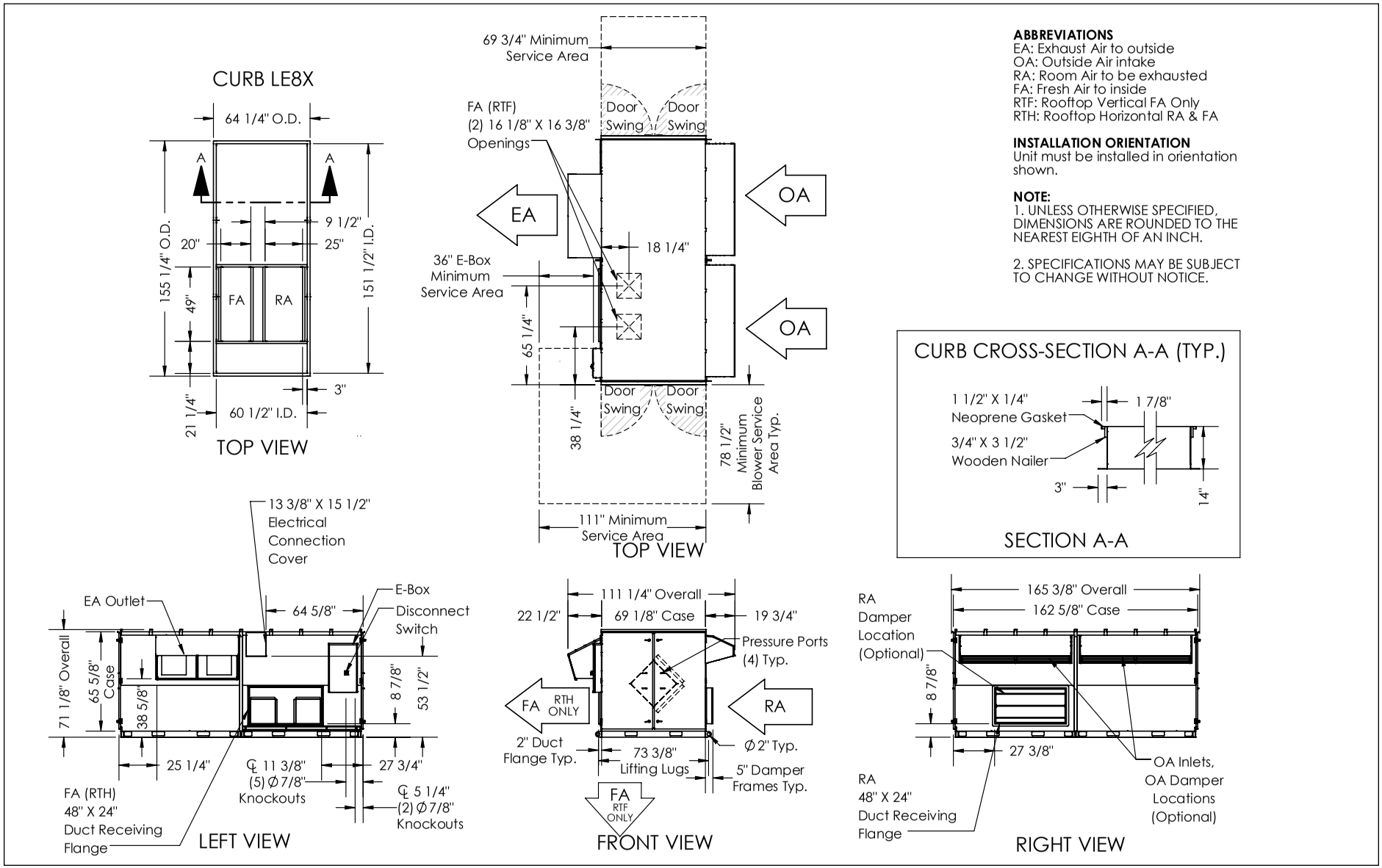

ABBREVIATIONS
EA: Exhaust Air to outside
OA: Outside Air intake
RA: Room Air to be exhausted
FA: Fresh Air to inside
RTF: Rooftop Vertical FA Only
RTH: Rooftop Horizontal RA & FA

INSTALLATION ORIENTATION
Unit must be installed in orientation shown.

NOTE:
1. UNLESS OTHERWISE SPECIFIED, DIMENSIONS ARE ROUNDED TO THE NEAREST EIGHTH OF AN INCH.

2. SPECIFICATIONS MAY BE SUBJECT TO CHANGE WITHOUT NOTICE.

AIRFLOW ORIENTATION

Available as shown:

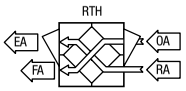

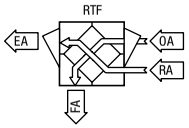

UNIT MOUNTING & APPLICATION

Must be mounted as shown. Airstreams can not be switched.

RenewAire Energy Recovery Ventilation

THIS PAGE IS INTENTIONALLY LEFT BLANK.

LE 10XINH

Energy Recovery Ventilator
Standard

Intertek

INDOOR UNIT

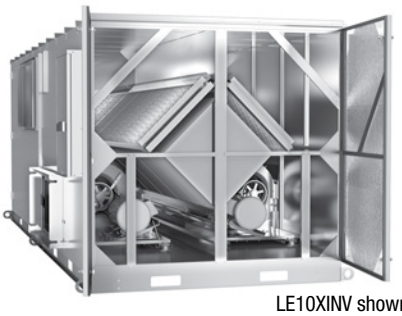

LE10XINV shown

Energy Recovery Core is AHRI Certified®

AHRI CERTIFIED®
www.ahridirectory.org
Air-to-Air ERV
AHRI Standard 1060
Energy Recovery COMPONENT is certified. Actual performance in packaged equipment may vary.

SPECIFICATIONS

Ventilation Type:
Static plate, heat and humidity transfer

Typical Airflow Range: 2,500-11,000 CFM

AHRI 1060 Certified Core: Ten L125-G5

Standard Features:
TEFC Premium efficiency motors
Motor starters
Non-fused disconnect
24 VAC transformer/relay package
Rubber vibration isolators
Cross-core differential pressure ports

Filters: Total qty. 20, MERV 8: 20" x 25" x 2"

Unit Weight:
Modular (per module) 1,423-1,912 lbs., varies by option(s)
Assembled (1-piece) 2,858-3,799 lbs., varies by option(s)

Max. Shipping Dimensions & Weight (on pallet):
Modular (2-modules) 120" L x 90" W x 78" H
Module 1 - 2,132 lbs., Module 2 - 2,107 lbs.
Assembled (1-piece) 240" L x 90" W x 78" H - 4,239 lbs.

Motor(s):
Qty. 2, Belt drive blower/standard motor packages with choice of adjustable sheaves for low, medium or high blower speed. (see table below)

Options:
Spring vibration isolators
Onboard variable frequency drives (VFDs) - both airstreams
Shaft grounding ring on motors with VFDs
Fused disconnect
Integrated programmable controls - enhanced, premium
Class 1 low leakage motorized isolation dampers - OA, RA or both
Qty. 2, Factory mounted filter alarms - both airstreams
Double wall construction
Exterior paint - white, custom colors

Accessories:
Filters - MERV 13, 2" or 4"; MERV 8, 4" (shipped loose)
Automatic balancing damper - 4", 5", 6"
Digital time clock - wall mount (TC7D-W), in exterior enclosure (TC7D-E)
Carbon dioxide sensor/control - wall mount (CO2-W), duct mount (CO2-D)
IAQ sensor - wall mount (IAQ-W), duct mount (IAQ-D)
Motion occupancy sensor/control - ceiling mount (MC-C), wall mount (MC-W)
Smoke Detector - duct mount (SD-D)
Electric duct heater - EK series (1–175 kW)
Indirect gas-fired duct furnace - GH series (50-400 MBH), installed downstream of any fans

AIRFLOW PERFORMANCE

Airflow CFM		External Static Pressure (in.w.g.)																		
		0.00		0.25		0.50		0.75		1.00		1.25		1.50		1.75		2.00		
		BHP	RPM	BHP	RPM	BHP	RPM	BHP	RPM	BHP	RPM	BHP	RPM	BHP	RPM	BHP	RPM	BHP	RPM	
								3 HP LOW SPEED				3 HP MED SPEED		3 HP HIGH SPEED						
2500								1.1	710	1.3	790	1.6	870	1.8	930	2.1	1000	2.4	1050	
3000						1.0	640	1.3	730	1.5	810	1.8	880	2.0	950	2.3	1010	2.6	1070	
3500						1.2	660	1.4	750	1.7	830	2.0	900	2.3	960	2.6	1020	2.9	1080	
4000						1.4	680	1.6	770	1.9	840	2.2	910	2.5	980	2.9	1040	3.2	1100	
4500						1.6	710	1.9	790	2.2	860	2.5	930	2.8	990	3.2	1050	3.5	1110	5 HP HIGH SPEED
5000				1.6	670	1.9	740	2.1	810	2.5	880	2.8	940	3.1	1000	3.5	1060	3.9	1120	
5500		1.6	640	1.9	710	2.2	770	2.5	840	2.8	900	3.1	960	3.5	1020	3.8	1080	4.2	1130	
6000		2.0	690	2.2	750	2.5	810	2.8	870	3.1	920	3.5	980	3.9	1040	4.2	1090	4.6	1150	
6500	3 HP LOW SPEED	2.4	740	2.6	790	2.9	850	3.2	900	3.6	950	3.9	1000	4.3	1060	4.7	1110	5.1	1160	7.5 HP MED SPEED
7000		2.8	790	3.1	830	3.4	880	3.7	930	4.0	980	4.4	1030	4.8	1080	5.2	1130	5.6	1170	
7500	5 HP LOW SPEED	3.3	830	3.6	880	3.9	920	4.2	970	4.6	1010	4.9	1050	5.3	1100	5.7	1140	6.1	1190	
8000		3.9	880	4.2	920	4.5	960	4.8	1000	5.1	1040	5.5	1080	5.9	1120	6.3	1160	6.7	1200	7.5 HP HIGH SPEED
8500	5 HP MED SPEED	4.5	930	4.8	960	5.1	1000	5.4	1030	5.8	1070	6.1	1100	6.5	1140	6.9	1180	7.3	1210	
9000	7.5 HP LOW SPEED	5.2	970	5.5	1000	5.8	1030	6.1	1060	6.4	1100	6.8	1130	7.1	1160	7.5	1190	7.9	1220	
9500		5.9	1010	6.2	1040	6.5	1060	6.8	1090	7.1	1120	7.5	1150	7.8	1180	8.2	1210	8.5	1230	
10000		6.7	1040	7.0	1070	7.3	1090	7.6	1120	7.9	1140	8.2	1170	8.5	1190	8.9	1220	9.2	1240	10 HP HIGH SPEED
10500	7.5 HP MED SPEED	7.5	1080	7.8	1100	8.1	1120	8.4	1140	8.7	1160	9.0	1190	9.3	1210	9.6	1230	10.0	1250	
11000		8.4	1100	8.6	1120	8.9	1140	9.2	1160	9.5	1180	9.8	1200							
	10 HP MED SPEED									10 HP HIGH SPEED										

Note: Airflow performance includes effect of clean, standard filter supplied with unit.

ELECTRICAL DATA

Standard Electrical Specifications							Optional Factory Installed VFD Electrical Specifications		
HP	Volts	HZ	Phase	FLA per motor	Min. Cir. Amps	Max. Overcurrent Protection Device	FLA per motor	Min. Cir. Amps	Max. Overcurrent Protection Device
3.0	208-230	60	Single	14.7-14	33.1	40	9.38-8.48	40.2	45
3.0	208-230	60	Three	9.38-8.48	21.1	25	9.38-8.48	23.2	25
	460	60	Three	4.24	9.5	15	4.24	10.5	15
	575	60	Three	3.3	7.4	15	3.3	8.2	15
5.0	208-230	60	Three	14.5-13.4	32.6	45	14.5-13.4	35.9	45
	460	60	Three	6.7	15.1	20	6.7	16.6	20
	575	60	Three	5.3	11.9	15	5.3	13.1	15
7.5	208-230	60	Three	21.0-19.0	47.3	60	21.0-19.0	52.0	60
	460	60	Three	9.5	21.4	25	9.5	23.5	25
	575	60	Three	7.6	17.1	20	7.6	18.8	20
10.0	208-230	60	Three	27.0-24.4	60.8	80	27.0-24.4	66.8	80
	460	60	Three	12.2	27.5	35	12.2	30.2	35
	575	60	Three	9.76	22.0	30	9.76	24.2	30

RenewAire® Energy Recovery Ventilation

LE10XINH Energy Recovery Ventilator Standard

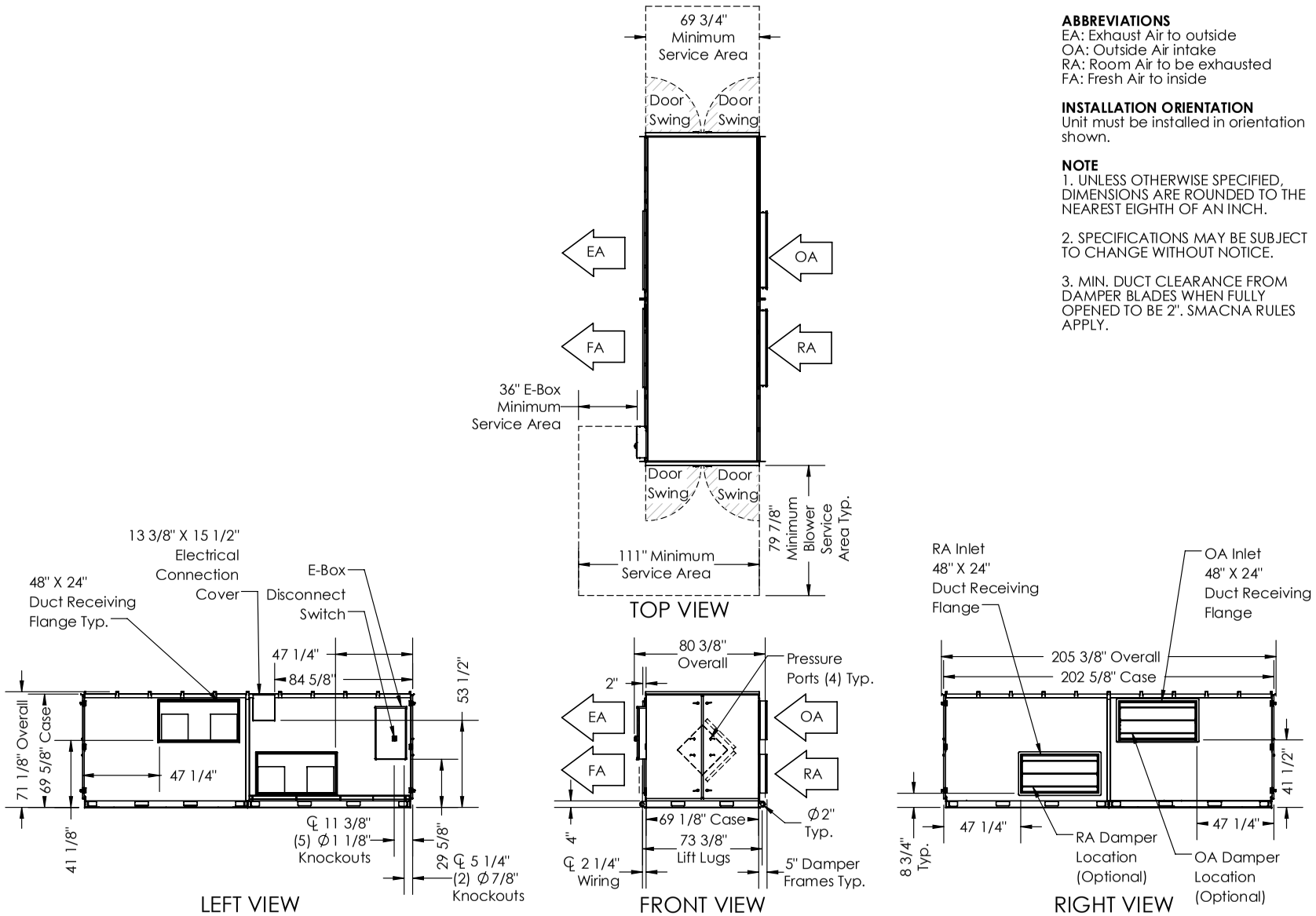

ABBREVIATIONS
EA: Exhaust Air to outside
OA: Outside Air intake
RA: Room Air to be exhausted
FA: Fresh Air to inside

INSTALLATION ORIENTATION
Unit must be installed in orientation shown.

NOTE
1. UNLESS OTHERWISE SPECIFIED, DIMENSIONS ARE ROUNDED TO THE NEAREST EIGHTH OF AN INCH.

2. SPECIFICATIONS MAY BE SUBJECT TO CHANGE WITHOUT NOTICE.

3. MIN. DUCT CLEARANCE FROM DAMPER BLADES WHEN FULLY OPENED TO BE 2". SMACNA RULES APPLY.

AIRFLOW ORIENTATION
Available as shown in dimension drawing.

UNIT MOUNTING & APPLICATION
Must be mounted as shown. RA/EA airstream can be switched with OA/FA airstream unless certain options are selected.

LE 10XINV

Energy Recovery Ventilator
Standard

Intertek

INDOOR UNIT

Energy Recovery Core is AHRI Certified®

AHRI CERTIFIED®
www.ahridirectory.org
Air-to-Air ERV
AHRI Standard 1060
Energy Recovery COMPONENT is certified. Actual performance in packaged equipment may vary.

SPECIFICATIONS

Ventilation Type:
Static plate, heat and humidity transfer

Typical Airflow Range: 2,500-11,000 CFM

AHRI 1060 Certified Core: Ten L125-G5

Standard Features:
TEFC Premium efficiency motors
Motor starters
Non-fused disconnect
24 VAC transformer/relay package
Rubber vibration isolators
Cross-core differential pressure ports

Filters: Total qty. 20, MERV 8: 20" x 25" x 2"

Unit Weight:
Modular (per module) 1,127-2,222 lbs., varies by option(s)
Assembled (1-piece) 2,858-3,788 lbs., varies by option(s)

Max. Shipping Dimensions & Weight (on pallet):
Modular (2-modules) 120" L x 90" W x 78" H
Module 1 - 2,442 lbs., Module 2 - 1,792 lbs.
Assembled (1-piece) 240" L x 90" W x 78" H - 4,228 lbs.

Motor(s): Qty. 2, Belt drive blower/standard motor packages with choice of adjustable sheaves for low, medium or high blower speed. (see table below)

Options:
Spring vibration isolators
Onboard variable frequency drives (VFDs) - both airstreams
Shaft grounding ring on motors with VFDs
Fused disconnect
Integrated programmable controls - enhanced, premium
Class 1 low leakage motorized isolation dampers - OA, RA or both
Qty. 2, Factory mounted filter alarms - both airstreams
Double wall construction
Exterior paint - white, custom colors

Accessories:
Filters - MERV 13, 2" or 4"; MERV 8, 4" (shipped loose)
Automatic balancing damper - 4", 5", 6"
Digital time clock - wall mount (TC7D-W), in exterior enclosure (TC7D-E)
Carbon dioxide sensor/control - wall mount (CO2-W), duct mount (CO2-D)
IAQ sensor - wall mount (IAQ-W), duct mount (IAQ-D)
Motion occupancy sensor/control - ceiling mount (MC-C), wall mount (MC-W)
Smoke Detector - duct mount (SD-D)
Electric duct heater - EK series (1–175 kW)
Indirect gas-fired duct furnace - GH series (50-400 MBH), installed downstream of any fans

AIRFLOW PERFORMANCE

Airflow CFM	External Static Pressure (in.w.g.)																			
		0.00		0.25		0.50		0.75		1.00		1.25		1.50		1.75		2.00		
		BHP	RPM	BHP	RPM	BHP	RPM	BHP	RPM	BHP	RPM	BHP	RPM	BHP	RPM	BHP	RPM	BHP	RPM	
								3 HP LOW SPEED				3 HP MED SPEED		3 HP HIGH SPEED						
2500								1.1	710	1.3	790	1.6	870	1.8	930	2.1	1000	2.4	1050	
3000						1.0	640	1.3	730	1.5	810	1.8	880	2.0	950	2.3	1010	2.6	1070	
3500						1.2	660	1.4	750	1.7	830	2.0	900	2.3	960	2.6	1020	2.9	1080	
4000						1.4	680	1.6	770	1.9	840	2.2	910	2.5	980	2.9	1040	3.2	1100	
4500						1.6	710	1.9	790	2.2	860	2.5	930	2.8	990	3.2	1050	3.5	1110	5 HP HIGH SPEED
5000				1.6	670	1.9	740	2.1	810	2.5	880	2.8	940	3.1	1000	3.5	1060	3.9	1120	
5500		1.6	640	1.9	710	2.2	770	2.5	840	2.8	900	3.1	960	3.5	1020	3.8	1080	4.2	1130	
6000	3 HP LOW SPEED	2.0	690	2.2	750	2.5	810	2.8	870	3.1	920	3.5	980	3.9	1040	4.2	1090	4.6	1150	
6500		2.4	740	2.6	790	2.9	850	3.2	900	3.6	950	3.9	1000	4.3	1060	4.7	1110	5.1	1160	7.5 HP MED SPEED
7000		2.8	790	3.1	830	3.4	880	3.7	930	4.0	980	4.4	1030	4.8	1080	5.2	1130	5.6	1170	
7500	5 HP LOW SPEED	3.3	830	3.6	880	3.9	920	4.2	970	4.6	1010	4.9	1050	5.3	1100	5.7	1140	6.1	1190	
8000		3.9	880	4.2	920	4.5	960	4.8	1000	5.1	1040	5.5	1080	5.9	1120	6.3	1160	6.7	1200	7.5 HP HIGH SPEED
8500	5 HP MED SPEED	4.5	930	4.8	960	5.1	1000	5.4	1030	5.8	1070	6.1	1100	6.5	1140	6.9	1180	7.3	1210	
9000	7.5 HP LOW SPEED	5.2	970	5.5	1000	5.8	1030	6.1	1060	6.4	1100	6.8	1130	7.1	1160	7.5	1190	7.9	1220	
9500		5.9	1010	6.2	1040	6.5	1060	6.8	1090	7.1	1120	7.5	1150	7.8	1180	8.2	1210	8.5	1230	
10000		6.7	1040	7.0	1070	7.3	1090	7.6	1120	7.9	1140	8.2	1170	8.5	1190	8.9	1220	9.2	1240	10 HP HIGH SPEED
10500	7.5 HP MED SPEED	7.5	1080	7.8	1100	8.1	1120	8.4	1140	8.7	1160	9.0	1190	9.3	1210	9.6	1230	10.0	1250	
11000		8.4	1100	8.6	1120	8.9	1140	9.2	1160	9.5	1180	9.8	1200							
	10 HP MED SPEED									10 HP HIGH SPEED										

Note: Airflow performance includes effect of clean, standard filter supplied with unit.

ELECTRICAL DATA

Standard Electrical Specifications							Optional Factory Installed VFD Electrical Specifications		
HP	Volts	HZ	Phase	FLA per motor	Min. Cir. Amps	Max. Overcurrent Protection Device	FLA per motor	Min. Cir. Amps	Max. Overcurrent Protection Device
3.0	208-230	60	Single	14.7-14	33.1	40	9.38-8.48	40.2	45
3.0	208-230	60	Three	9.38-8.48	21.1	25	9.38-8.48	23.2	25
	460	60	Three	4.24	9.5	15	4.24	10.5	15
	575	60	Three	3.3	7.4	15	3.3	8.2	15
5.0	208-230	60	Three	14.5-13.4	32.6	45	14.5-13.4	35.9	45
	460	60	Three	6.7	15.1	20	6.7	16.6	20
	575	60	Three	5.3	11.9	15	5.3	13.1	15
7.5	208-230	60	Three	21.0-19.0	47.3	60	21.0-19.0	52.0	60
	460	60	Three	9.5	21.4	25	9.5	23.5	25
	575	60	Three	7.6	17.1	20	7.6	18.8	20
10.0	208-230	60	Three	27.0-24.4	60.8	80	27.0-24.4	66.8	80
	460	60	Three	12.2	27.5	35	12.2	30.2	35
	575	60	Three	9.76	22.0	30	9.76	24.2	30

RenewAire® Energy Recovery Ventilation

LE10XINV Energy Recovery Ventilator Standard

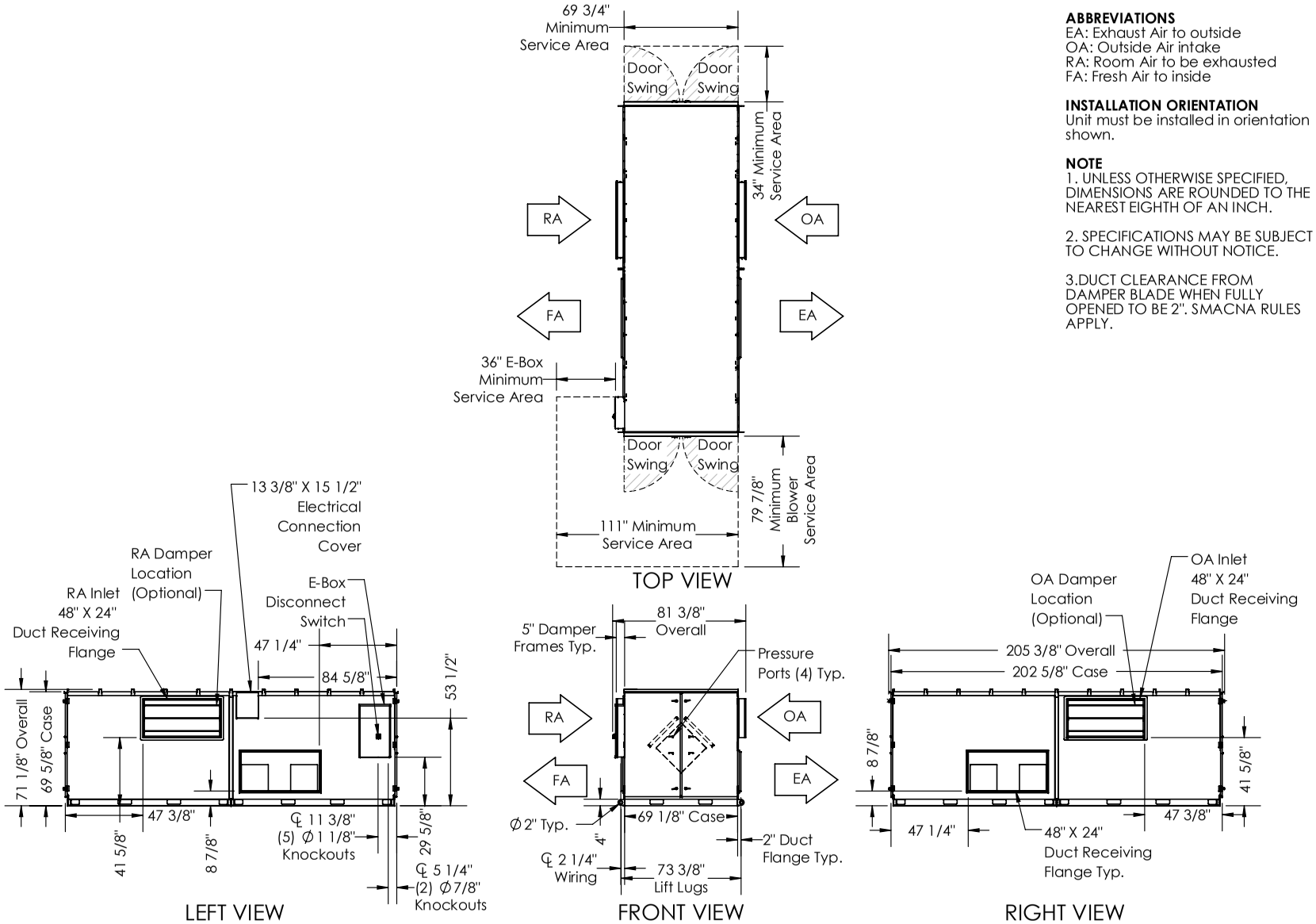

ABBREVIATIONS
EA: Exhaust Air to outside
OA: Outside Air intake
RA: Room Air to be exhausted
FA: Fresh Air to inside

INSTALLATION ORIENTATION
Unit must be installed in orientation shown.

NOTE
1. UNLESS OTHERWISE SPECIFIED, DIMENSIONS ARE ROUNDED TO THE NEAREST EIGHTH OF AN INCH.

2. SPECIFICATIONS MAY BE SUBJECT TO CHANGE WITHOUT NOTICE.

3.DUCT CLEARANCE FROM DAMPER BLADE WHEN FULLY OPENED TO BE 2". SMACNA RULES APPLY.

AIRFLOW ORIENTATION
Available as shown in dimension drawing.

UNIT MOUNTING & APPLICATION
Must be mounted as shown. RA/EA airstream can be switched with OA/FA airstream unless certain options are selected.

LE 10XRT

Energy Recovery Ventilator
Standard

Intertek

ROOFTOP UNIT

Energy Recovery Core is AHRI Certified®

AHRI CERTIFIED®
www.ahridirectory.org
Air-to-Air ERV
AHRI Standard 1060
Energy Recovery COMPONENT is certified. Actual performance in packaged equipment may vary.

SPECIFICATIONS

Ventilation Type:
Static plate, heat and humidity transfer

Typical Airflow Range: 2,500-11,000 CFM

AHRI 1060 Certified Core: Ten L125-G5

Standard Features:
TEFC Premium efficiency motors
Motor starters
Non-fused disconnect
24 VAC transformer/relay package
Rubber vibration isolators
Cross-core differential pressure ports

Filters:
Total qty. 20, MERV 8: 20" x 25" x 2"

Unit Weight:
Modular (per module) 1,493-2,057 lbs., varies by option(s)
Assembled (1-piece) 3,032-3,993 lbs., varies by option(s)

Max. Shipping Dimensions & Weight (on pallet):
Modular (2-modules) 120" L x 90" W x 78" H
Module 1 - 2,277 lbs., Module 2 - 2,245 lbs.
Assembled (1-piece) 240" L x 90" W x 78" H - 4,433 lbs.

Motor(s):
Qty. 2, Belt drive blower/standard motor packages with choice of adjustable sheaves for low, medium or high blower speed. (see table below)

Options:
Spring vibration isolators
Onboard variable frequency drives (VFDs) - both airstreams
Shaft grounding ring on motors with VFDs
Fused disconnect
Integrated programmable controls - enhanced, premium
Class 1 low leakage motorized isolation dampers - OA, RA or both
Qty. 2, Factory mounted filter alarms - both airstreams
Double wall construction
Exterior paint - white, custom colors

Accessories:
Filters - MERV 13, 2" or 4"; MERV 8, 4" (shipped loose)
Automatic balancing damper - 4", 5", 6"
Roof curb - standard 14"
Curb wind clip
Digital time clock - wall mount (TC7D-W), in exterior enclosure (TC7D-E)
Carbon dioxide sensor/control - wall mount (CO2-W), duct mount (CO2-D)
IAQ sensor - wall mount (IAQ-W), duct mount (IAQ-D)
Motion occupancy sensor/control - ceiling mount (MC-C), wall mount (MC-W)
Smoke Detector - duct mount (SD-D)
Electric duct heater - EK series (1–175 kW); designed for indoor ductwork installation only
Indirect gas-fired duct furnace - GH series (50-400 MBH), installed downstream of any fans

AIRFLOW PERFORMANCE

Airflow CFM		External Static Pressure (in.w.g.)																		
		0.00		0.25		0.50		0.75		1.00		1.25		1.50		1.75		2.00		
		BHP	RPM	BHP	RPM	BHP	RPM	BHP	RPM	BHP	RPM	BHP	RPM	BHP	RPM	BHP	RPM	BHP	RPM	
						3 HP LOW SPEED				3 HP MED SPEED				3 HP HIGH SPEED						
2500						1.0	640	1.2	740	1.5	820	1.7	880	2.0	950	2.3	1000	2.6	1060	
3000						1.1	660	1.4	760	1.7	830	2.0	900	2.3	960	2.6	1020	2.9	1070	
3500						1.3	690	1.6	770	1.9	850	2.2	920	2.5	980	2.9	1040	3.2	1090	
4000						1.5	710	1.8	790	2.1	870	2.5	930	2.8	1000	3.2	1060	3.6	1110	5 HP HIGH SPEED
4500				1.4	650	1.7	740	2.1	810	2.4	890	2.8	950	3.2	1020	3.6	1070	3.9	1130	
5000				1.7	680	2.0	760	2.4	840	2.7	910	3.1	970	3.5	1030	3.9	1090	4.4	1150	
5500		1.7	650	2.0	720	2.4	800	2.7	870	3.1	930	3.5	990	3.9	1050	4.4	1110	4.8	1170	
6000	3 HP LOW SPEED	2.1	690	2.4	760	2.8	830	3.1	890	3.5	960	4.0	1020	4.4	1080	4.8	1130	5.3	1190	
6500		2.5	740	2.8	800	3.2	870	3.6	930	4.0	980	4.4	1040	4.9	1100	5.3	1160	5.8	1210	7.5 HP HIGH SPEED
7000		3.0	790	3.3	850	3.7	900	4.1	960	4.5	1010	5.0	1070	5.4	1120	5.9	1180	6.4	1230	
7500	5 HP LOW SPEED	3.5	840	3.9	890	4.3	940	4.7	990	5.1	1040	5.5	1100	6.0	1150	6.4	1200	6.9	1250	
8000		4.1	880	4.5	930	4.9	980	5.3	1030	5.7	1070	6.1	1120	6.6	1170	7.0	1220	7.5	1270	
8500	5 HP MED SPEED	4.8	930	5.2	970	5.5	1010	5.9	1060	6.3	1100	6.8	1150	7.2	1200	7.7	1240	8.1	1290	
9000	7.5 HP LOW SPEED	5.5	970	5.9	1010	6.2	1050	6.6	1090	7.0	1130	7.4	1170	7.8	1220	8.3	1260	8.7	1300	10 HP HIGH SPEED
9500		6.2	1010	6.6	1050	6.9	1080	7.3	1120	7.7	1160	8.1	1200	8.5	1240	8.9	1280	9.3	1310	
10000	7.5 HP MED SPEED	7.0	1050	7.3	1080	7.7	1110	8.0	1150	8.4	1180	8.7	1220	9.1	1250	9.5	1290	9.9	1320	
10500		7.8	1080	8.1	1110	8.4	1140	8.7	1170	9.1	1200	9.4	1230	9.7	1260					
11000		8.6	1110	8.9	1140	9.2	1160	9.4	1190	9.7	1220									
	10 HP MED SPEED							10 HP HIGH SPEED												

Note: Airflow performance includes effect of clean, standard filter supplied with unit.

ELECTRICAL DATA

Standard Electrical Specifications							Optional Factory Installed VFD Electrical Specifications		
HP	Volts	HZ	Phase	FLA per motor	Min. Cir. Amps	Max. Overcurrent Protection Device	FLA per motor	Min. Cir. Amps	Max. Overcurrent Protection Device
3.0	208-230	60	Single	14.7-14	33.1	40	9.38-8.48	40.2	45
3.0	208-230	60	Three	9.38-8.48	21.1	25	9.38-8.48	23.2	25
	460	60	Three	4.24	9.5	15	4.24	10.5	15
	575	60	Three	3.3	7.4	15	3.3	8.2	15
5.0	208-230	60	Three	14.5-13.4	32.6	45	14.5-13.4	35.9	45
	460	60	Three	6.7	15.1	20	6.7	16.6	20
	575	60	Three	5.3	11.9	15	5.3	13.1	15
7.5	208-230	60	Three	21.0-19.0	47.3	60	21.0-19.0	52.0	60
	460	60	Three	9.5	21.4	25	9.5	23.5	25
	575	60	Three	7.6	17.1	20	7.6	18.8	20
10.0	208-230	60	Three	27.0-24.4	60.8	80	27.0-24.4	66.8	80
	460	60	Three	12.2	27.5	35	12.2	30.2	35
	575	60	Three	9.76	22.0	30	9.76	24.2	30

RenewAire® Energy Recovery Ventilation

LE10XRT (RTV/RTR) Energy Recovery Ventilator Standard

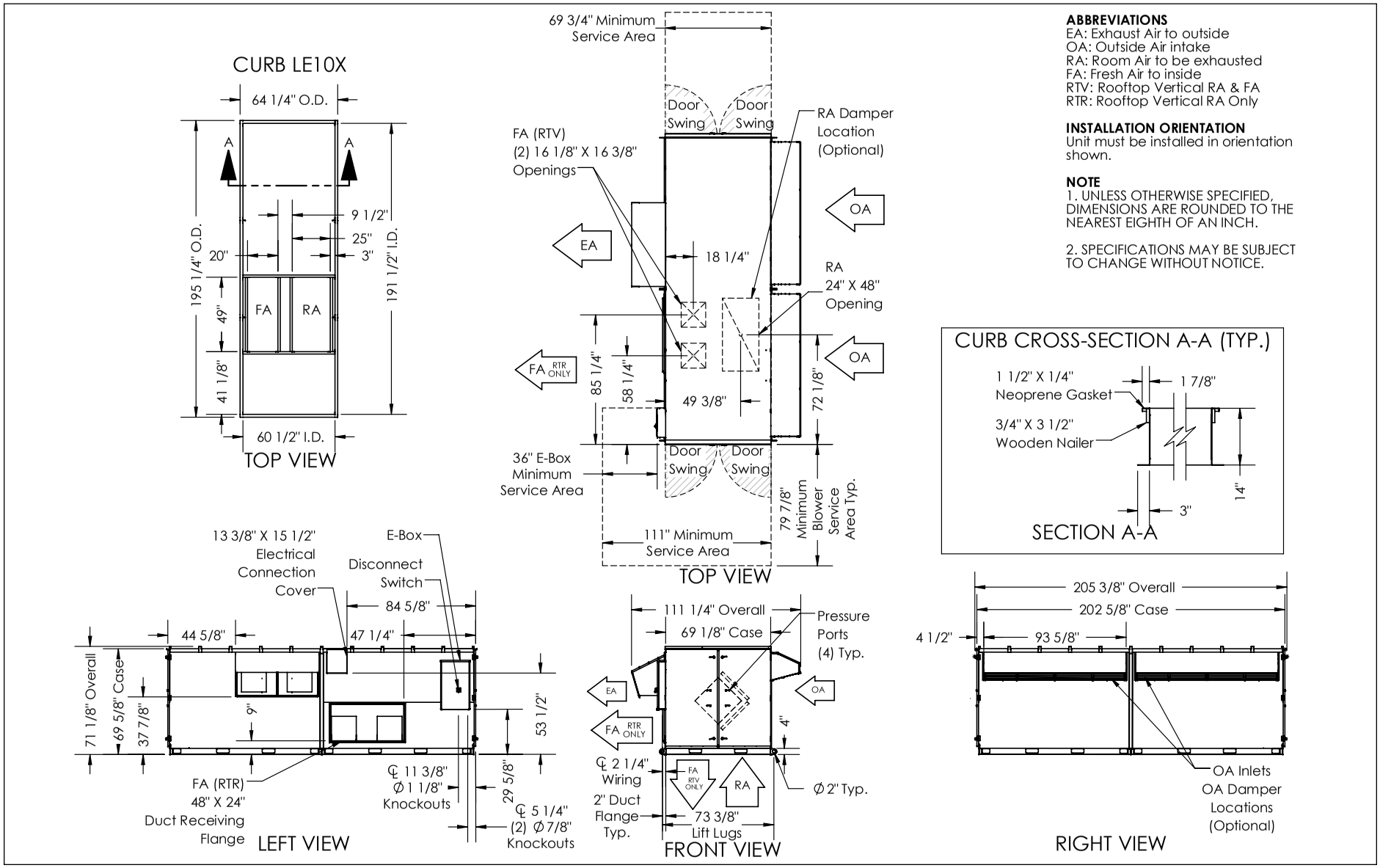

ABBREVIATIONS
EA: Exhaust Air to outside
OA: Outside Air intake
RA: Room Air to be exhausted
FA: Fresh Air to inside
RTV: Rooftop Vertical RA & FA
RTR: Rooftop Vertical RA Only

INSTALLATION ORIENTATION
Unit must be installed in orientation shown.

NOTE
1. UNLESS OTHERWISE SPECIFIED, DIMENSIONS ARE ROUNDED TO THE NEAREST EIGHTH OF AN INCH.

2. SPECIFICATIONS MAY BE SUBJECT TO CHANGE WITHOUT NOTICE.

AIRFLOW ORIENTATION
Available as shown:

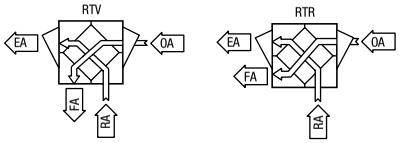

UNIT MOUNTING & APPLICATION
Must be mounted as shown. Airstreams can not be switched.

LE10XRT (RTH/RTF) Energy Recovery Ventilator Standard

ABBREVIATIONS
EA: Exhaust Air to outside
OA: Outside Air intake
RA: Room Air to be exhausted
FA: Fresh Air to inside
RTF: Rooftop Vertical FA Only
RTH: Rooftop Horizontal RA & FA

INSTALLATION ORIENTATION
Unit must be installed in orientation shown.

NOTE
1. UNLESS OTHERWISE SPECIFIED, DIMENSIONS ARE ROUNDED TO THE NEAREST EIGHTH OF AN INCH.

2. SPECIFICATIONS MAY BE SUBJECT TO CHANGE WITHOUT NOTICE.

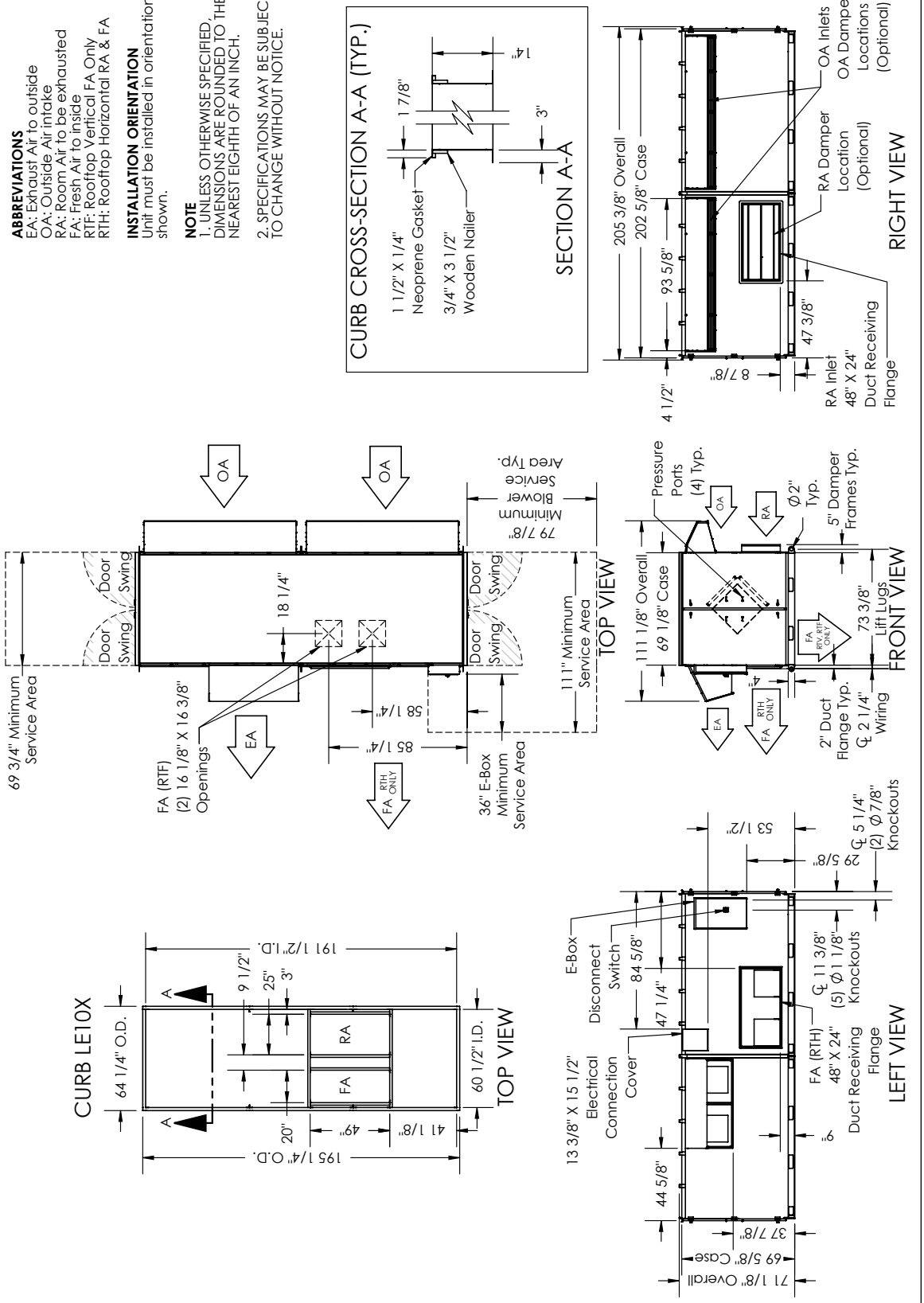

UNIT MOUNTING & APPLICATION
Must be mounted as shown. Airstreams can not be switched.

AIRFLOW ORIENTATION
Available as shown:

RenewAire Energy Recovery Ventilation

OPTIONS

See individual submittal pages for availability by model.

ELECTRICAL

- Disconnect fuses and motor starters

VARIABLE FREQUENCY DRIVE

- Factory supplied and mounted variable frequency drives (VFDs)
  - both airstreams
- Provides additional control options
- Separate VFD for each airstream
- Display/control in electrical box
  - can be remotely mounted
- Pre-programmed speeds or variable speed
- Easy airflow setup using RenewAire's standard pressure ports
  - cuts commissioning time
- Shaft grounding ring on motors with VFDs

VFD all voltage except 575V

VFD 575V only

MOTORIZED ISOLATION DAMPERS

- Class 1, low leakage
- Robust, reliable actuators for highest dependability
- Automatic operation with spring return in event of power loss
- Damper(s) are factory mounted and wired

FILTER ALARM

- Factory mounted airflow switches
  - one for each airstream
- Allows for remote indication of loaded (dirty) filter

EXTERIOR PAINT

- White and custom colors available

OPTIONS

Integrated Programmable Controls

RenewAire's **INTEGRATED PROGRAMMABLE CONTROLS** optimize the usability and performance of our commercial ERVs by improving functionality, enabling intelligent controls, streamlining operations and boosting efficiencies. This is accomplished via sophisticated factory-installed microprocessor controls and sensors that provide stand-alone ERVs with Direct Digital Control (DDC) and/or Building Management System (BMS) control interface.

KEY BENEFITS

Optimize usability:

- Maximize ERV functionality and intelligent control via remote Ethernet accessibility and BMS connectivity without third-party interface.
- Streamline operations by easily managing and changing ERV control parameters via an advanced user interface.
- Increase uptime reliability through constant system monitoring.
- Achieve cleaner and healthier indoor air via IAQ-based ERV control.

Improve performance:

- Support effective and efficient ERV performance with real-time data trending and logging capabilities.
- Enhance ERV control via access to real-time airflow rates, airstream temperature and airstream humidity.
- Facilitate fast and easy ERV upkeep and maintenance with real-time fan, filter and bypass status.

Increase capabilities:

- Expand ERV connectivity via access to a wide range of open standard protocols, including BACnet and Modbus.
- Broaden ERV interoperability by connecting to third-party equipment and receiving third-party signals for unit control.
- Expand ERV-application scope by meeting new code requirements and the needs of institutional customers requiring DDC controls in mechanical equipment.

Simplify operations:

- Achieve easier ERV setup, commissioning and balancing via simple-to-install controls.
- Improve operational efficiencies by easily communicating ERV status, airflows, temperatures and humidity.
- Allow for more flexible installations by enabling ERVs to be interconnected with a BMS, operated independently or run in concert with other ERVs.

ACCESSORIES AVAILABLE WITH INTEGRATED PROGRAMMABLE CONTROLS

	ENHANCED CONTROLS	PREMIUM CONTROLS
CO2 sensor (wall or duct mount)*		◆
IAQ sensor (wall or duct mount)*		◆
Occupancy sensor (ceiling or wall mount)		◆
Smoke detector (duct mount)	◆	◆
BACnet factory activation (MS/TP or TCP/IP)	◆	◆
Remote display (handheld or wall mount)	◆	◆
Room Pressure Sensor (with or without display)		◆
Duct Static Pressure Sensor (with or without display)		◆
Temperature Sensor Kit (wall or duct mount)**		◆

NOTES

*Sensor output is 0-10 VDC, for use as on/off or modulating control with VFD or ECM.

**Temperature Sensor Kit is for use with non-integrated heating.

OPTIONS

Controls

MODELS

STANDARD CONTROLS

via dry contact and relays

Our ERV units are provided with a dry contact that can be used to control the unit with a variety of low-voltage (24 VAC) control devices such as remote switches or relays. In addition, third-party analog output can be used to operate the ERV.

INTEGRATED PROGRAMMABLE CONTROLS

ENHANCED CONTROLS

Carel [c.pCOMini] with or without BACnet

Enhanced controls offer automated control, including temperature and humidity control with data trending via microprocessor controls and sensors that enable BMS connectivity.

PREMIUM CONTROLS

Carel [c.pCOMini] with expansion module with or without BACnet

Premium controls include all functionality of Enhanced-controls capabilities, as well as airflow and IAQ monitoring, demand control, electric or gas heating options, as well as RD-Series cooling and heating control.

It is not necessary that RenewAire controls be used to operate RenewAire units. A wide range of controls or building automation systems may be used.

FEATURE COMPARISON

	STANDARD CONTROLS	ENHANCED CONTROLS	PREMIUM CONTROLS
Ability to automatically enable and disable unit	◆	◆	◆
Enable the exhaust fan only (See note 1)	◆	◆	◆
Filter alarm for both sets of filters (See note 2)	◆	◆	◆
Control isolation dampers (See note 3)	◆	◆	◆
Supply fan only modulation for VFD/EC Motor units (See note 4 and 5)	◆	◆	◆
Exhaust fan only modulation for VFD/EC Motor units (See note 4 and 5)	◆	◆	◆
Internal time clock (See note 6)	◆	◆	◆
Defrost controls - Canada only	◆	◆	◆
Smoke detection - sensor required (See note 7)	◆	◆	◆
Demand control ventilation using CO2 - sensor required	◆		◆
Occupancy-based ventilation - sensor required	◆		◆
IAQ control ventilation using VOC - sensor required	◆		◆
Microprocessor controller		◆	◆
Provide supply and exhaust air temperatures		◆	◆
Provide outside and return air temperature and humidity		◆	◆
Fan status on both fans		◆	◆
Enable the supply fan only	◆	◆	◆
Enable the exhaust fan only	◆	◆	◆
Micro USB port		◆	◆
Fieldbus port		◆	◆
BACnet MS/TP or BACnet TCP/IP - activation required		◆	◆
Modbus		◆	◆
Data trending		◆	◆
Outside airflow rate control			◆
Exhaust airflow rate control			◆
Space pressure control sensor required			◆
Duct pressure control sensor required			◆
Unit supply air temp sensor required			◆
Heating enable			◆
Heating modulation - staged or modulating			◆

NOTES FOR STANDARD CONTROLS ONLY

1. Relays and terminal block (option).
2. Differential pressure sensing tube and pressure switch with manual trip point adjustment (option), wiring to switch and alarm indication provided by others.
3. 24V transformer contactors and relays (option).
4. VFD (option). Factory installed and wired.
5. EC Motor (option) Potentiometer control factory wired.
6. Independent time clock (option).
7. External smoke detector (option), field installed in series to shut off unit in adverse conditions.

ACCESSORIES

Controls Continued

***Compatible with Standard or Integrated Programmable Controls.**

****Only Compatible with Integrated Programmable Controls.**

DIGITAL TIME CLOCK*

- Up to 8 on/off cycles per day or 56 per week
- 24 VAC power requirement
- Battery back-up
- Wall mount or outdoor enclosure options
- Wall mount fits any 4" x 4" electrical box

TC7D-W
Wall Mount

TC7D-E Control In NEMA 3R Enclosures

CO2 SENSORS*

- Adjustable control from 400-2000 PPM
- Digital display
- 24 VAC power requirement
- Computer/BAS interface for information and control
- Self calibrates during periods of low occupancy
- Wall mount or add duct mount accessory

CO2-W
Wall Mount

CO2-D
Duct Mount

IAQ SENSORS*

- Measures TVOC
- Direct correlation to CO2 levels
- 0-2000 ppm CO2 equivalent output signal
- Digital display on wall mount
- Selectable 0-5 or 0-10V dc signal
- 24 VAC power required
- Internal menu for easy set-up

IAQ-W
Wall Mount

IAQ-D
Duct Mount

MOTION OCCUPANCY SENSORS*

- Passive infrared sensor
- Adjustable time-off delay to 30 minutes
- 24 VAC power requirement
- Ceiling mount or directable wall mount
- Coverage floor space
  - Ceiling mount: 1500 sq. ft.
  - Wall mount: 2500 sq. ft.
- Major motion area
  - Ceiling mount: 50 ft. diameter
  - Wall mount: 68 x 50 ft.

MC-C
Ceiling Mount

MC-W
Wall Mount

SMOKE DETECTOR*

- Photoelectric type detector
- Plug-in sensor
- Round, square or rectangular duct mounting options
- Easy access test/reset button and LED display
- For 100-4000 fpm duct air velocity applications
- 24 VAC power requirement
- Interconnect feature for multi-fan shutdown
- Built-in short circuit protection

SD-D
Duct Mount

REMOTE DISPLAY**

- Hand held or wall mount
- LED display
- Keypad for easy programming

RD-M
Handheld or Wall Mount

RenewAire Energy Recovery Ventilation

ACCESSORIES

Controls Continued

PRESSURE SENSORS (ROOM PRESSURE/DUCT STATIC PRESSURE)**

- With or without display
- Differential pressure transmitter
- 4-20 mA or field selectable 0-10 & 0.5V output signal
- Integral barbed tubing connections that fit 1/8" and 3/16" ID tubing

RPS-WOD/DPS-WOD
Wall/Duct Mount
without Display

RPS-WD/DPS-WD
Wall/Duct Mount
with Display

BACNET FACTORY ACTIVATION**

- Allows for communication to a BAS via BACnet MS/TP
- Factory programmed and tested

BN-A

TEMPERATURE SENSOR KIT**

- Duct temperature sensors
- Hermetically sealed 304SS probe
- Operating range -40°F to 210°F
- Easy installation with integral mounting plate

TS
Duct Mount

Dampers

4", 5" & 6" AUTOMATIC BALANCING (ABV-4, ABV-5 & ABV-6)

- Adaptability
- Steri-Balance™
- Sealed tight
- Bi-directional
- Total control
- UL classified

Engineered Combo Curbs

Exclusively designed for select Trane (Voyager and Precedent) and Carrier (WeatherExpert, WeatherMaster, and WeatherMaker) models, RenewAire's engineered combo curb makes it easy to combine standard Air Handling Unit (AHU) rooftop applications with the benefits of RenewAire energy recovery ventilation. They eliminate the need for transitional ductwork between the RTU and the ERV, reducing the time and costs of installation. Simply install the curb, run the return and supply duct to the curb openings, then install the AHU and RenewAire units onto the curb. Additionally, the curbs allow the AHU unit to function in its standard operation as well as full-flow economizer modes.

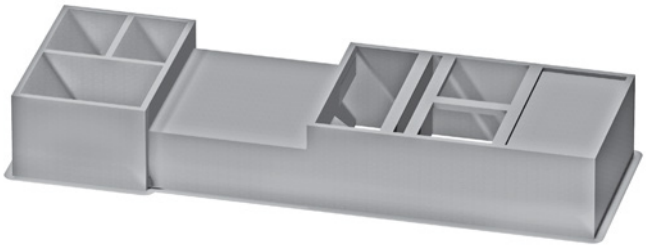

Standard Construction

- Prime G-90, 18-gauge galvanized steel
- Fully welded and mitered corners (single piece curb lift)
- Base flange attachments for securing to the building structure
- 1 ½" 3 lb. density fiberglass insulation
- Reinforced with cross channel supports on center
- Conforms to ASTM A653/A653M (standard specification for sheet metal)

Available Options (Special Order)

- Seismic and/or wind load applications
- Pitched roof applications
- High vibration applications
- Custom curb heights
- Heavier metal gauges
- Aluminum liners

ACCESSORIES

EK Series Electric Duct Heater

AVAILABLE ON ALL COMMERCIAL UNITS (SOME EXCEPTIONS APPLY)

RenewAire offers the highest-efficiency energy recovery ventilators (ERVs) on the market. However, during winter conditions, supply air from the ERV may be less than optimal for space conditions. By adding **CONFIGURABLE ELECTRIC DUCT HEATERS** as an accessory to our commercial ERVs, RenewAire can now heat supply air during cooler months to enhance indoor comfort, all via one package for ERVs and heaters from a single source.

FLIPPABLE
EK SERIES
SHOWN

KEY BENEFITS

- **A single-source responsibility reduces time and costs:** A single information source, a single purchase point and a single approval package for ERVs and heaters reduces design time and costs, and streamlines logistics for design engineers and contractors.
- **More flexibility:** RenewAire offers design engineers the capability to specify ERVs with a matching heater to boost flexibility and provide heated air to a single space or multiple spaces.
- **Easy installation:** A ZERO clearance rating to combustibles allows designers and contractors to apply RenewAire heaters with less restrictions onsite.
- **Ultimate reliability:** RenewAire heaters come with our two-year warranty and unmatched reliability. Single-source responsibility offers contractors and end users peace of mind and a single call location for technical, start-up and commissioning questions.
- **Highly certified:** UL Listed (UL1996 Standard) and CSA certified.

EK SERIES

Electric Duct Heater (1-175 kW)

Accessory

c UL us LISTED DUCTED HEAT RECOVERY VENTILATOR 89S5

ELECTRIC DUCT HEATER

SPECIFICATIONS

Heater Type:
Electric Duct Heater

Typical KW Range:
1–175 kW

Standard Features:
A disconnecting magnetic control contactor per stage or each 48 Amp circuit within a stage
Open-coil element
Staged on/off
Control terminal board
Grounding lugs
Automatic limit switch for primary over-temperature protection
Manual reset limit switch for secondary over-temperature protection
Non-adjustable airflow switch
Standard control transformer - 24 VAC
Disconnect switch
Duct thermostat with sensor for on/off control
60-20-20 (Ni/Cr/Fe) C Grade element wire with nickel-plated terminals
Slip-in mount
No left/right hand
Vertical up/down flow

Voltages & Phase:
Single phase - 120, 208, 240, 277
Three phase - 208, 240, 480, 600

Control Voltage:
24 VAC

Dimensions:
Minimum - 8" x 8" (W x H)
Maximum - 99" x 99" (W x H)

Options:
Flange mount
80-20 (Ni/Cr) A Grade element wire with stainless steel terminals
Recessed control box 1"
Gasketed cover - dust tight
Power fusing, standard for heaters drawing more than 48 Amps
2-stage
Electronic step controller (4-stage)
SCR (up to 96 Amps)
SCR Vernier (over 96 Amps)
Pilot light

Accessory:
Room thermostat
Room/duct thermostat-sensor kit for SCR control

Note: Electric duct heater designed for indoor ductwork installation only.

EK SERIES HEATER CAPACITY

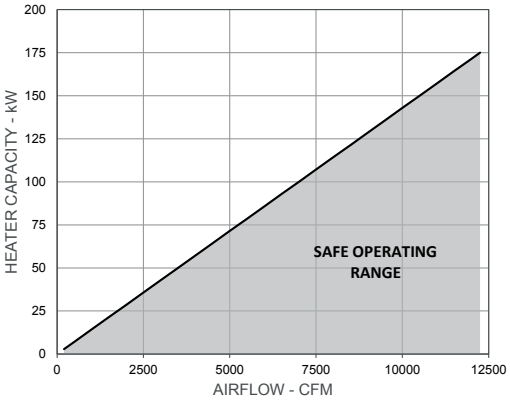

PRESSURE DROP THROUGH HEATER

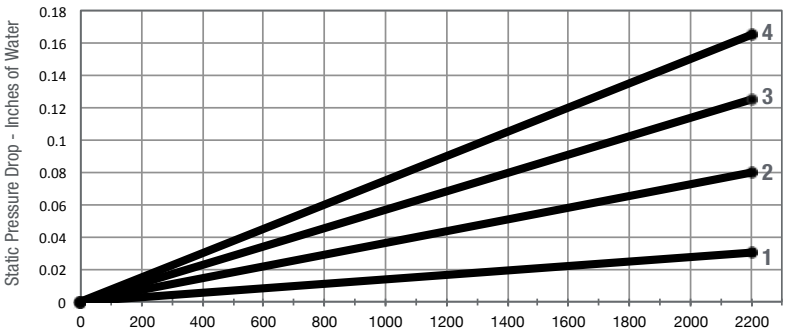

Air Velocity - FPM (1, 2, 3 and 4 - the number of rows of heater coils)
When the number of rows of heater coils is unknown, assume 4.

FLIPPABLE CAPABILITIES

Unique to the EK series, this unit has the ability to flip 180°. Additionally, EK heaters features both vertical up and vertical down airflow.

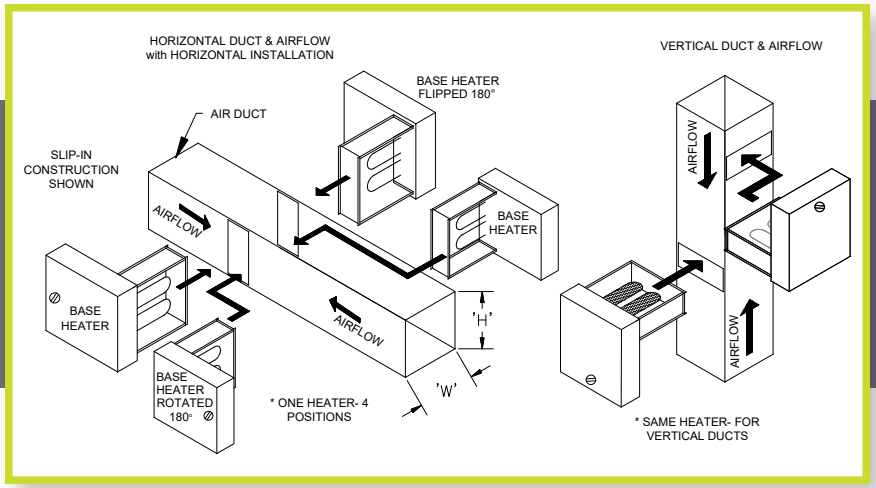

THIS PAGE IS INTENTIONALLY LEFT BLANK.

ACCESSORIES

Indirect Gas-Fired Duct Furnace

AVAILABLE ON ALL COMMERCIAL UNITS (SOME EXCEPTIONS APPLY)

RenewAire offers some of the highest-efficiency energy recovery ventilators (ERVs) on the market. However, during winter conditions, supply air from the ERV may be less than optimal for space conditions. By providing an indoor and outdoor **INDIRECT GAS-FIRED DUCT FURNACE** as an accessory for our commercial ERVs, in addition to the Electric Duct Heater, RenewAire ERVs now have increased flexibility for controlling supply-air temperature during cooler months. This enhances indoor comfort, makes ERV installations easier and is possible via a single source for ERVs and furnaces.

GH OUTDOOR SERIES
SHOWN

KEY BENEFITS

- **A single source for your ERV and furnace reduces time and costs:** A single information source, a single purchase point and a single approval package for ERVs and heaters reduces design time and costs, as well as streamlines logistics for design engineers and contractors.
- **Increased capabilities and flexibility:** RenewAire offers design engineers the capability to specify ERVs with a matching indoor or outdoor gas-fired furnace to increase ERV capabilities and flexibility for providing a single space or multiple spaces with tempered air conditions to equal wintertime loads.
- **More and easier applications:** The addition of the indoor and outdoor indirect gas-fired duct furnace as an accessory ensures that RenewAire ERVs can be easily specified on more applications that require gas heating of the recovered air.
- **Expert guidance:** The RenewAire customer-support team will provide detailed and expert guidance for how best to install the indoor and outdoor gas-fired duct furnace with an ERV.
- **Ultimate reliability:** RenewAire furnaces come with our two-year warranty and unmatched reliability. Single-source responsibility offers contractors and end users peace of mind and a single call location for technical, start-up and commissioning questions.
- **Highly certified:** ETL-listed to the requirements of ANSI Z83.8/ CSA 2.6.

GH INDOOR Indirect Gas-Fired Duct Furnace
Accessory

INDOOR
Indirect Gas-Fired Duct Furnace

Indoor IN-KI shown

SPECIFICATIONS

Heater Type:
Indirect Gas-Fired Duct Furnace

Typical Input Capacity (MBH):
50, 75, 100, 125, 150, 175,
200, 250, 300, 350, 400

Standard Features:
Tubular heaters
Indirect natural gas fired
Indoor installation
81% thermal efficiency
Horizontal airflow
Rated for elevations from 0–2,000 ft.
409 stainless steel heat exchanger
409 stainless steel burners
Flue/combustion air: indoor models
  Vertical (separated indoor)
  Vertical top exhaust with louvered intake
Direct spark ignition
1-stage/2-stage gas controls
Induced draft venting
Terminal block for power and control wiring
Automatic high limit safety shut-off
Auxiliary manual high limit switch
Combustion air pressure switch
Air proving switch
Combination gas valve with shutoff

Standard Features (continued):
Flame rollout switch
Manual shut off valve
3/8" condensate drain connection

Voltages & Phase:
Single phase: 120V, 208V, 230V

Control Voltage:
24VAC

Dimensions:
See table 2

Shipping:
Shipped loose with base unit and installed in the field

Options:
Indirect propane fired fuel
Elevation correction for elevation > 2,000 ft.
304 stainless steel heat exchanger
5:1 continuous electronic modulation for all furnaces
10:1 continuous electronic modulation for furnaces
  200 MBH and larger
Duct thermostat for modulation control
Disconnect switch
Power fusing

Accessory:
Duct thermostat for 1-stage/2-stage control
Duct thermostat for modulation control

FLUE AND COMBUSTION AIR CONFIGURATION

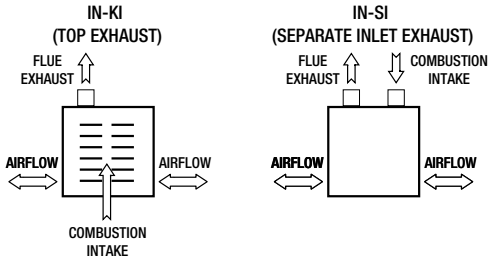

Note: The total equivalent length of vent pipe must not exceed 50 feet. If equivalent length exceeds 50 feet refer to IOM for recommendations.

Caution: All indirect gas-fired duct furnaces to be installed downstream of the ERV and on the positive side of the supply fan.

TEMPERATURE RISE AND PRESSURE DROP

FIGURE 1 GAS FURNACE 50–200 MBH

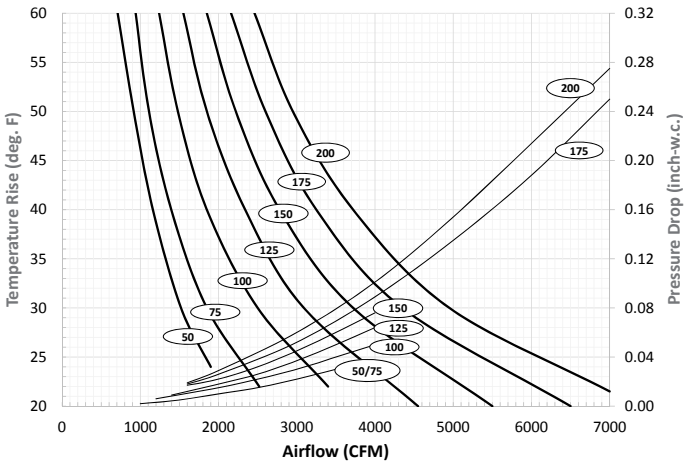

FIGURE 2 GAS FURNACE 250–400 MBH

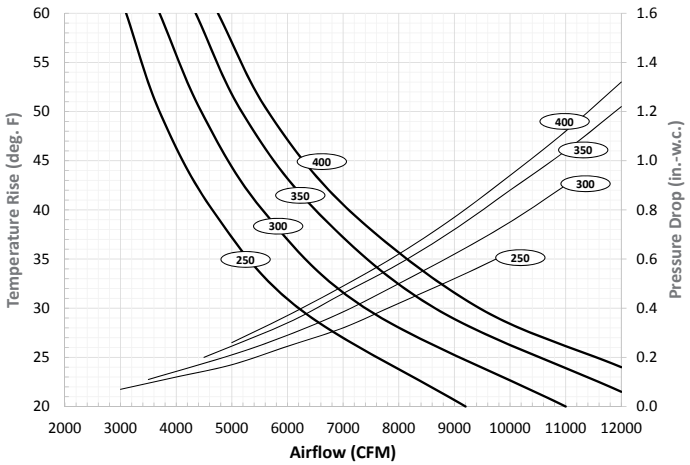

RenewAire Energy Recovery Ventilation

DUCT FURNACE DIMENSIONS

FIGURE 3 IN-KI (TOP EXHAUST INDOOR)

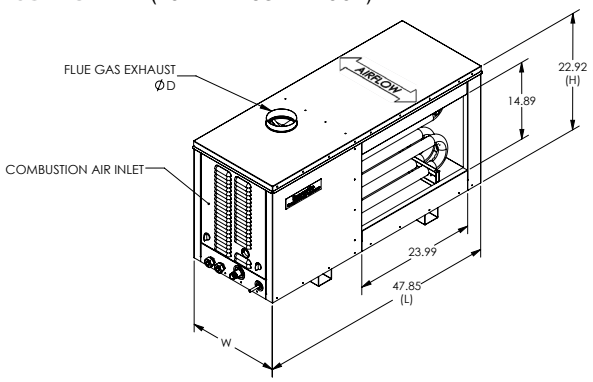

FIGURE 4 IN-SI (SEPARATE INLET EXHAUST INDOOR)

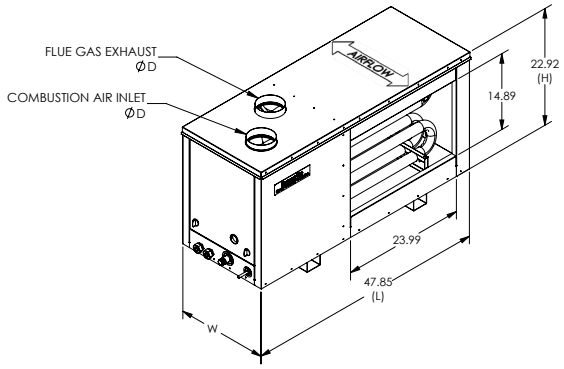

TABLE 2

Size	Tubes	Input Rate	Output	Min/Max Temperature Rise through Furnace (°F)									Vent Locations				Unit Weight	Shipping Weight
				20	25	30	35	40	45	50	55	60	IN-KI, IN-SI			Diameter		
													W	L	H	D		
MBH	Qty.	BTUh	BTUh	Nom. Duct Opening Airflow (CFM)									inch	inch	inch	inch	lb	lb
50	3	50,000	40,000	1852	1481	1235	1058	926	823	741	673	617	15.7	47.8	22.9	5	127	207
75	3	75,000	60,000	2778	2222	1852	1587	1389	1235	1111	1010	926	15.7				127	207
100	4	100,000	80,000	3704	2963	2469	2116	1852	1646	1481	1347	1235	18.4				142	222
125	5	125,000	100,000	4630	3704	3086	2646	2315	2058	1852	1684	1543	21.2				169	249
150	6	150,000	120,000	5556	4444	3704	3175	2778	2469	2222	2020	1852	23.9				160	240
175	7	175,000	140,000	6481	5185	4321	3704	3241	2881	2593	2357	2160	26.7				180	260
200	8	200,000	160,000	7407	5926	4938	4233	3704	3292	2963	2694	2469	29.4			6	196	276
250	10	250,000	200,000	9259	7407	6173	5291	4630	4115	3704	3367	3086	34.9				245	325
300	12	300,000	240,000	11111	8889	7407	6349	5556	4938	4444	4040	3704	40.4				279	384
350	14	350,000	280,000	12963	10370	8642	7407	6481	5761	5185	4714	4321	45.9				324	429
400	15	400,000	320,000	14815	11852	9877	8466	7407	6584	5926	5387	4938	48.7				394	499

Note: For a single furnace, 20° F minimum temperature rise, 60° F maximum temperature rise.

INDIRECT GAS-FIRED DUCT FURNACE DIMENSIONS

UNIT DIMENSIONS WILL BE CHANGING STARTING JUNE 2023.

NEW DIMENSION DRAWINGS WILL BE CREATED AT TIME OF ORDER.

NOTES

1. UNLESS OTHERWISE SPECIFIED, DIMENSIONS ARE ROUNDED TO THE NEAREST EIGHTH OF AN INCH.
2. SPECIFICATIONS SUBJECT TO CHANGE WITHOUT NOTICE.

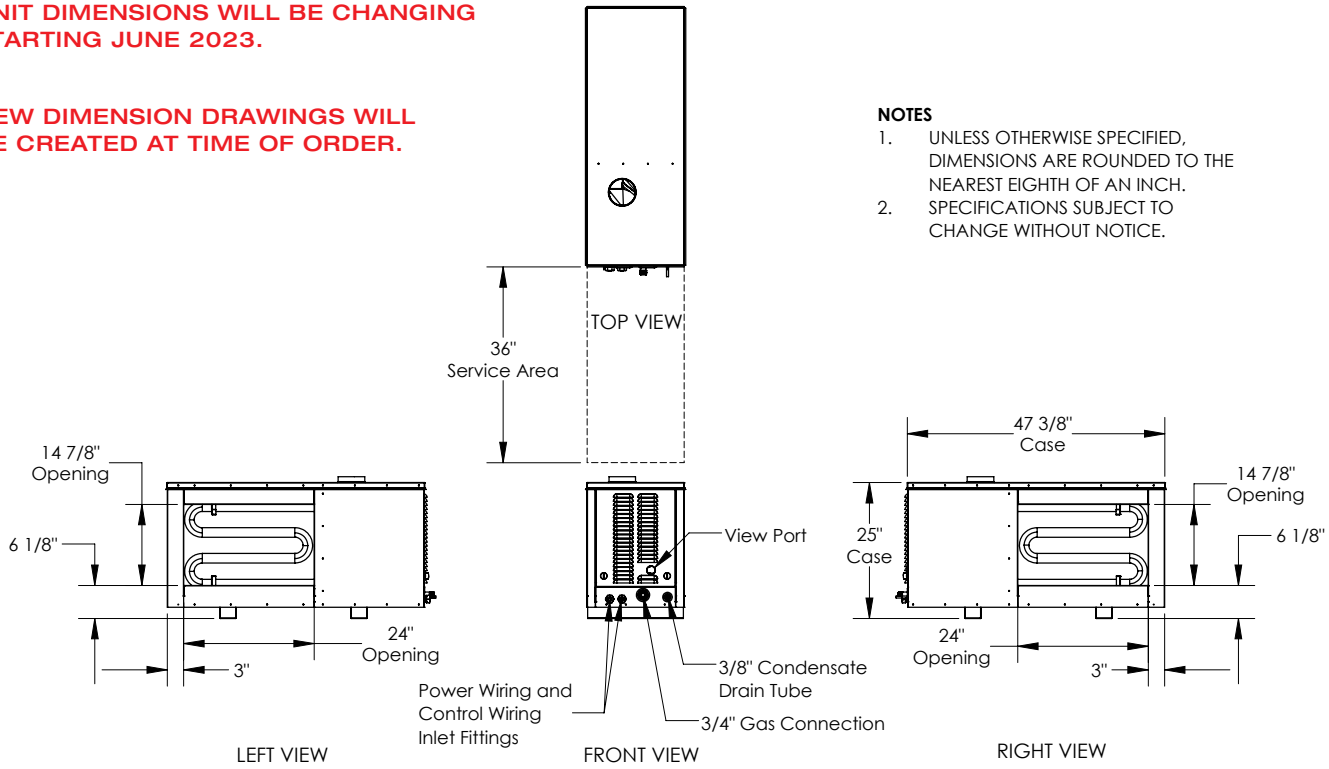

GH OUTDOOR Indirect Gas-Fired Duct Furnace
Accessory

ROOFTOP
Indirect Gas-Fired Duct Furnace

Rooftop RT-NO shown

SPECIFICATIONS

Heater Type:
Indirect Gas-Fired Duct Furnace

Typical Input Capacity (MBH):
50, 75, 100, 125, 150, 175,
200, 250, 300, 350, 400

Standard Features:
Tubular heaters
Indirect natural gas fired
Outdoor installation
81% thermal efficiency
Horizontal airflow
Rated for elevations from 0–2,000 ft.
409 stainless steel heat exchanger
409 stainless steel burners
Flue/combustion air: outdoor models
  Horizontal separated outdoor with hoods
  Vertical top exhaust with intake hood
Direct spark ignition
1-stage/2-stage gas controls
Induced draft venting
Terminal block for power and control wiring
Automatic high limit safety shut-off
Auxiliary manual high limit switch
Combustion air pressure switch
Air proving switch

Standard Features (continued):
Combination gas valve with shutoff
Flame rollout switch
Manual shut off valve
3/8" condensate drain connection

Voltages & Phase:
Single phase: 120V, 208V, 230V

Control Voltage:
24VAC

Dimensions:
See table 1

Shipping:
Shipped loose with base unit and installed in the field

Options:
Indirect propane fired fuel
Elevation correction for elevation > 2,000 ft.
304 stainless steel heat exchanger
5:1 continuous electronic modulation for all furnaces
10:1 continuous electronic modulation for furnaces
  200 MBH and larger
Duct thermostat for modulation control
Disconnect switch
Power fusing

Accessory:
Duct thermostat for 2-stage control
Duct thermostat for modulation control
Duct curb

FLUE AND COMBUSTION AIR CONFIGURATION

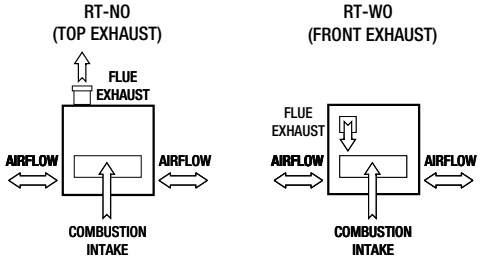

Caution: All indirect gas-fired duct furnaces to be installed downstream of the ERV and on the positive side of the supply fan.

TEMPERATURE RISE AND PRESSURE DROP

FIGURE 1 GAS FURNACE 50–200 MBH

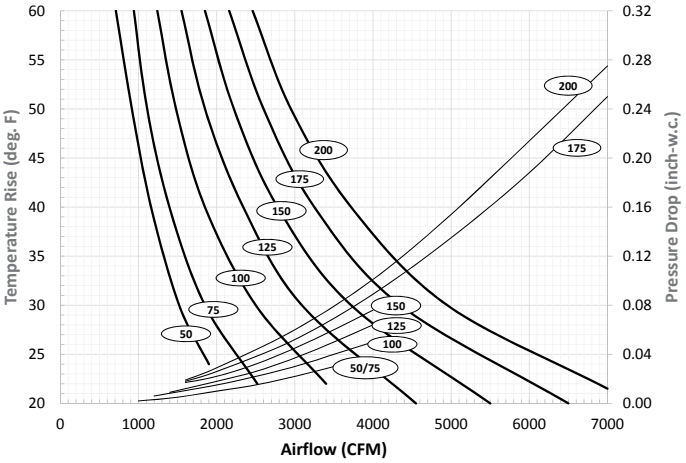

FIGURE 2 GAS FURNACE 250–400 MBH

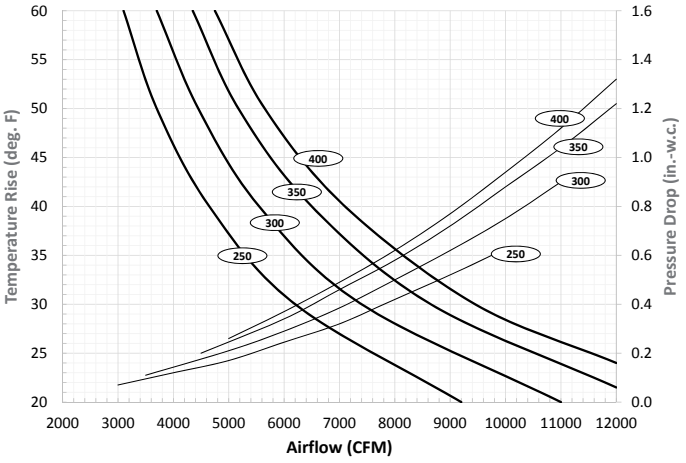

DUCT FURNACE DIMENSIONS

FIGURE 3 RT-NO (TOP EXHAUST OUTDOOR)

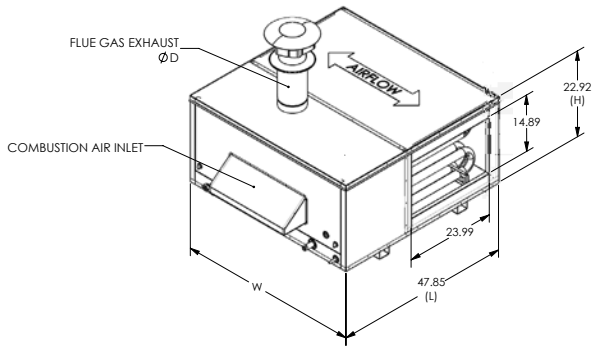

FIGURE 4 RT-WO (FRONT EXHAUST OUTDOOR)

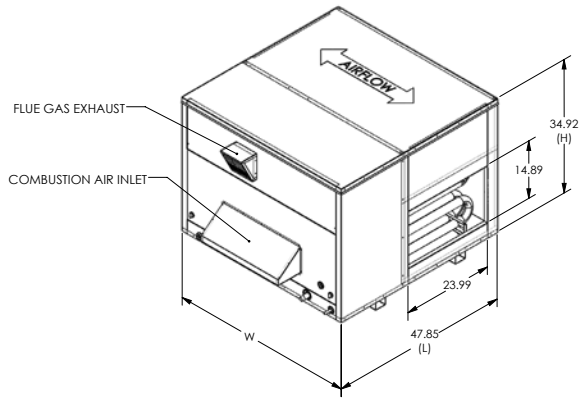

TABLE 1

Size	Tubes	Input Rate	Output	Min/Max Temperature Rise through Furnace (°F)									Vent Locations					Unit Weight	Shipping Weight
				20	25	30	35	40	45	50	55	60	RT-NO, RT-WO W	RT-NO, RT-WO L	RT-NO H	RT-WO H	Diameter D		
MBH	Qty.	BTUh	BTUh	Nom. Duct Opening Airflow (CFM)									inch	inch	inch	inch	inch	lb	lb
50	3	50,000	40,000	1852	1481	1235	1058	926	823	741	673	617	15.7	47.8	22.9	34.9	5	127	207
75	3	75,000	60,000	2778	2222	1852	1587	1389	1235	1111	1010	926	15.7					127	207
100	4	100,000	80,000	3704	2963	2469	2116	1852	1646	1481	1347	1235	18.4					142	222
125	5	125,000	100,000	4630	3704	3086	2646	2315	2058	1852	1684	1543	21.2					169	249
150	6	150,000	120,000	5556	4444	3704	3175	2778	2469	2222	2020	1852	23.9					160	240
175	7	175,000	140,000	6481	5185	4321	3704	3241	2881	2593	2357	2160	26.7					180	260
200	8	200,000	160,000	7407	5926	4938	4233	3704	3292	2963	2694	2469	29.4				6	196	276
250	10	250,000	200,000	9259	7407	6173	5291	4630	4115	3704	3367	3086	34.9					245	325
300	12	300,000	240,000	11111	8889	7407	6349	5556	4938	4444	4040	3704	40.4					279	384
350	14	350,000	280,000	12963	10370	8642	7407	6481	5761	5185	4714	4321	45.9					324	429
400	15	400,000	320,000	14815	11852	9877	8466	7407	6584	5926	5387	4938	48.7					394	499

Note: For a single furnace, 20° F minimum temperature rise, 60° F maximum temperature rise.

INDIRECT GAS-FIRED DUCT FURNACE DIMENSIONS

UNIT DIMENSIONS WILL BE CHANGING STARTING JUNE 2023.

NEW DIMENSION DRAWINGS WILL BE CREATED AT TIME OF ORDER.

NOTES

1. UNLESS OTHERWISE SPECIFIED, DIMENSIONS ARE ROUNDED TO THE NEAREST EIGHTH OF AN INCH.
2. SPECIFICATIONS SUBJECT TO CHANGE WITHOUT NOTICE.

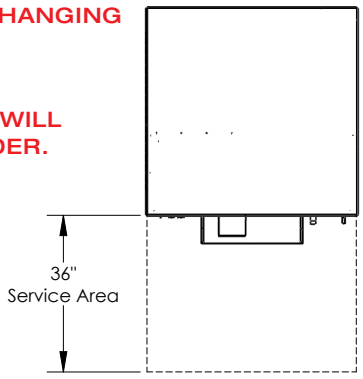

TOP VIEW

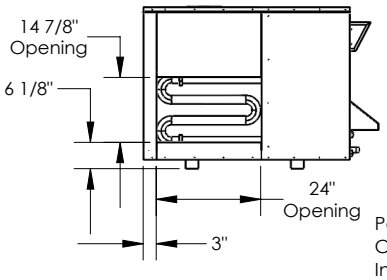

LEFT VIEW

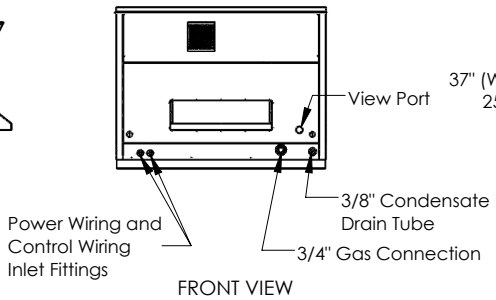

FRONT VIEW

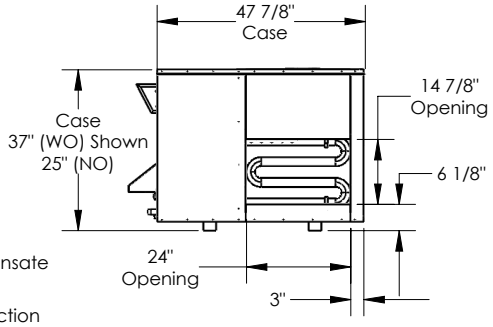

RIGHT VIEW

LE SERIES MODEL CONFIGURATION GUIDE

Note: Not all options are available on every model.

MODEL NUMBER	L	E				J										-	-								
DIGIT NUMBER	1	2	3	4	5	6	7	8	9	10	11	12	13	14	15	16	17	18	19	20	21	22	23	24	25

Digits 1–5:	Model
"LE-6X"	
"LE-8X"	
"LE10X"	

Digits 7–8:	Location
"IN" = Indoor	
"RT" = Rooftop	

Digit 9:	Orientation
"V", "H" (Indoor Units)	
"V", "H", "R", "F" (Rooftop Units)	

Digit 10:	Vibration Isolation
"N" = Neoprene Isolators	
"S" = Spring Isolators	

Digit 11:	Wall Type
"S" = Single	
"D" = Double	

Digit 12:	Phase (See Restriction 2)
"1" = Single Phase	
"3" = Three Phase	

Digit 13:	Voltage (see Restriction 1)
"4" = 460V	
"5" = 208–230V	
"8" = 575V	

Digit 14:	FA Horsepower (see Restrictions 2, 3 & 4)
"D" = 3 HP Low Speed	
"F" = 3 HP Medium Speed	
"G" = 3 HP High Speed	
"J" = 5 HP Low Speed	
"K" = 5 HP Medium Speed	
"L" = 5 HP High Speed	
"M" = 7.5 HP Low Speed	
"N" = 7.5 HP Medium Speed	
"P" = 7.5 HP High Speed	
"Q" = 10 HP Medium Speed	
"R" = 10 HP High Speed	

Digit 15:	EA Horsepower (see Restrictions 2, 3 & 4)
"D" = 3 HP Low Speed	
"F" = 3 HP Medium Speed	
"G" = 3 HP High Speed	
"J" = 5 HP Low Speed	
"K" = 5 HP Medium Speed	
"L" = 5 HP High Speed	
"M" = 7.5 HP Low Speed	
"N" = 7.5 HP Medium Speed	
"P" = 7.5 HP High Speed	
"Q" = 10 HP Medium Speed	
"R" = 10 HP High Speed	

*NOTES:
Digit 6 "J" = G5 Core Type. Digits 16 and 17 are not used in these models.

Digit 18:	Flow Control
"-" = No Isolation Damper	
"D" = Motorized Damper both Airstreams	
"E" = Motorized Damper EA or RA Airstream	
"F" = Motorized Damper FA or OA Airstream	

Digit 19:	Unit Control (see Restrictions 6 & 7)
"A" = Standard Unit Control Wiring	
"V" = Onboard VFD Both Airstreams	

Digit 20:	Disconnect
"N" = Non-Fused (Standard)	
"F" = Fused	

Digit 21:	Unit Control Enhancements
"T" = Transformer with Isolation Relay (Standard)	
"1" = Enhanced Controls	
"2" = Premium Controls	
"3" = Enhanced Controls with BACnet License	
"4" = Premium Controls with BACnet License	

Digit 22:	Filter Options (see Restriction 8)
"-" = None (Standard)	
"F" = Filter Monitor Both Airstreams	

Digit 23:	Flexible Packaging
"A" = Assembled (single piece flat bed)	
"M" = Modular (two pieces for enclosed trailer)	

Digit 24:	Paint and Customization
"-" = None	
"W" = White Paint	
"C" = Custom Paint	
"X" = Custom Unit	

Digit 25:	Safety Listing (see Restriction 5)
"L" = Listed	
"N" = Non-Listed	

For Technical Support E-mail: RenewaireSupport@renewaire.com
To Place an Order E-mail: RenewaireOrders@renewaire.com

RenewAire® Energy Recovery Ventilation

LE SERIES MODEL CONFIGURATION GUIDE

Note: Not all options are available on every model.

MODEL NUMBER	L	E				J										-	-								
DIGIT NUMBER	1	2	3	4	5	6	7	8	9	10	11	12	13	14	15	16	17	18	19	20	21	22	23	24	25

Restrictions:

1: Voltage Codes "4" & "8" only available with Phase Code "3" (Three-Phase).
2: Phase Code "1" only available in Motor Codes "D", "F", & "G".
3: Motor Code "P" (7.5 HP High Speed) not available in LE-6X.
4: Motor Codes "Q" and "R" (all 10 HP Speeds) not available in LE-6X & LE-8X.
5: Some units with Customization Code "X" are not safety listed.
6: Unit Control Code "V" only available with Motor Codes "G", "L", & "N" in LE-6X.
7: Unit Control Code "V" only available with Motor Codes "G", "L", "P", & "R" in LE-8X & LE10X.
8: Filter Code "F" not available with Unit Control Enhancements Codes "1", "2", "3", & "4". Filter Monitor is provided with those options with those options.

For Technical Support E-mail: RenewaireSupport@renewaire.com
To Place an Order E-mail: RenewaireOrders@renewaire.com

EK SERIES ELECTRIC DUCT HEATER CONFIGURATION GUIDE

Note: Not all options are available on every model.

MODEL NUMBER	E	K	-									C										S		-	
DIGIT NUMBER	1	2	3	4	5	6	7	8	9	10	11	12	13	14	15	16	17	18	19	20	21	22	23	24	25

Digits 1–2:	Heater Type
"EK "= Electric Heater (Standard)	

Digits 4–5:	Width in Inches (see Restriction 1)
08–99	

Digits 6–7:	Height in Inches (see Restriction 2)
08–99	

Digits 8–10:	Capacity in kW (see Restrictions 3, 4, & 5)
001–175	

Digit 11:	Mount
"S" = Slip In (Standard)	
"F = Flanged	

Digit 12:	Element Style
"C" = Open Coil (Standard)	

Digit 13:	Element Material
"C" = 60-20-20 Ni-Cr-Fe with Nickel Plate Terminal Pins (Standard)	
"A" = 80-20 Ni-Cr with Stainless Steel Terminal Pins	

Digit 14:	Airflow Orientation
"H" = Horizontal (Standard)	
"V" = Vertical	

Digit 15:	Control Box Offset
"L" = Left Hand (Standard)	
"R" = Right Hand	

Digit 16:	Control Box Recessed
"-" = None (Standard)	
"R" = Recessed 1"	

Digit 17:	Control Box Dust Tight
"-" = None (Standard)	
"D" = Dust Tight	

Digit 18:	Voltage (see Restrictions 7 & 8)
"1" = 120V	
"2" = 208V	
"3" = 240V	
"4" = 480V	
"8" = 600V	
"9" = 277V	

Digit 19:	Phase
"1" = Single-Phase	
"3" = Three-Phase	

Digit 20:	Power Fusing (see Restriction 9)
"-" = None	
"F" = Fusing	

Digit 21:	Element Material
"1" = Single (Standard)	
"2" = 2-Stage	
"4" = 4-Stage	

Digit 22:	Control Voltage
"S" = 24VAC	

Digit 23:	Control Type (see Restrictions 10, 11, & 12)
"D" = Staged with Thermostat and Sensor (Standard)	
"E" = Electronic Step Control with Thermostat and Sensor	
"S" = SCR (control by others)	
"V" = SCR with Thermostat and Sensor	

Digit 25:	Pilot Light (See Restriction 13)
"N" = None (Standard)	
"L" = Light	

***NOTES:**
Digits 3 and 24 are not used in this model.
All heaters come with standard features: Disconnect Switch, Air Flow Switch (non adjustable), Control Transformer
Descriptions of feature and options are found in the installation and operation manual.

Restrictions:

1: Width inches entered as a whole number.
2: Height inches entered as a whole number.
3: Heater density should be less than 30kW/ft². $\text{DENSITY} = \frac{\text{HEATER CAPACITY (kW)}}{(\text{W" x H"}) / 144} < 30$

4: Heater capacity kW entered as a whole number.
5: Formulas for calculating kW and temperature rise: $kW = \frac{CFM \times \Delta T}{3150}$ $\Delta T = \frac{kW \times 3150}{CFM}$

7: Voltage Codes "1" & "9" only available with Phase Code "1" (Single-Phase).
8: Voltage Codes "4" & "8" only available with Phase Code "3" (Three-Phase).
9: Power Fusing Code "F" required when amperage is > 48A. (based on kW and voltage)
10: Control Type Code "D" only available with Stage Code "1" & "2".
11: Control Type Code "E" only available with Stage Code "4".
12: Control Type Code "S" & "V" only available with Stage Code "1", unless amperage is greater than or equal to 96A, then Stage Code "4" is automatically selected.
13: Pilot Light Code "L" only available with Control Type Code "D".
3. Power Fusing Code "F" only available with Disconnect Switch Code "D". Power Fusing Code "F" always selected when Disconnect Switch Code "D" is selected.

For Technical Support E-mail: RenewaireSupport@renewaire.com
To Place an Order E-mail: RenewaireOrders@renewaire.com

RenewAire® Energy Recovery Ventilation

GH SERIES INDIRECT GAS-FIRED DUCT FURNACE CONFIGURATION GUIDE

Note: Not all options are available on every model.

MODEL NUMBER	G	H	-											H	T				1		-	S		-	-
DIGIT NUMBER	1	2	3	4	5	6	7	8	9	10	11	12	13	14	15	16	17	18	19	20	21	22	23	24	25

Digits 1–2:	Model
"GH" = Gas Furnace 50–400 MBH	

Digits 4–5:	Location
"IN" = Indoor	
"RT" = Rooftop	

Digits 6–7:	Vent Location
"SI" = Separated Top Indoor	
"KI" = Top Exhaust Indoor	
"WO" = Front Exhaust Outdoor	
"NO" = Top Exhaust Outdoor	

Digits 8–10:	Input Capacity in MBH
"050", "075", "100", "125", "150", "175", "200", "250", "300", "350", "400"	

Digit 11:	Fuel Type
"N" = Natural Gas (Standard)	
"P" = Propane	

Digits 12–13:	Tube Material
"SS" = 409 Stainless Steel (Standard)	
"CS" = 304 Stainless Steel	

Digit 14:	Airflow Orientation
"H" = Horizontal	

Digit 15:	Thermal Efficiency
"T" = 81%	

Digit 16:	Elevation
"S" = 0–2000' (Standard)	
"2" = 2001'–3000'	
"3" = 3001'–4000'	
"4" = 4001'–5000'	
"5" = 5001'–6000'	
"6" = 6001'–7000'	
"Y" = 7001' and above	

Digit 17:	Disconnect Switch
"N" = None (Standard)	
"D" = Disconnect Switch	

Digit 18:	System/Inducer Voltage (see Restriction 2)
"1" = 115V	
"2" = 208V	
"3" = 230V	

Digit 19:	Phase
"1" = Single Phase	

Digit 20:	Power Fusing (see Restriction 3)
"N" = None	
"F" = Fusing	

Digit 22:	Control Voltage
"S" = 24VAC	

Digit 23	Control Type (see Restriction 1)
"T" = Two Stage High/Low with Thermostat (Standard)	
"S" = Single Stage On/Off with Thermostat	
"E" = Modulating 5:1 (Natural Gas)/3:1 (Propane) with Thermostat	
"W" = Modulating 10:1 (Natural Gas)/6:1 (Propane) with Thermostat	
"2" = Two Stage High/Low without Thermostat	
"1" = Single Stage On/Off without Thermostat	
"M" = Modulating 5:1 (Natural Gas)/3:1 (Propane) without Thermostat	
"V" = Modulating 10:1 (Natural Gas)/6:1 (Propane) without Thermostat	

***NOTES:**
Digits 3, 21, 24, & 25 are not used in this model.
All heaters come with standard features: Air Proving Switch, Auxiliary High Temperature Limit Switch
Descriptions of feature and options are found in the installation and operation manual.

Restrictions:
1: Control Type Code "V" & "W" not available with Input Capacity in MBH Codes "050", "075", "100", "125", "150", & "175".
2: System/Inducer Voltage Code "2" not available with Input Capacity in MBH Codes "050", "075", "100", "125" , "150", "175" & "200".
3. Power Fusing Code “F” only available with Disconnect Switch Code “D”. Power Fusing Code “F” always selected when Disconnect Switch Code “D” is selected.

For Technical Support E-mail: RenewaireSupport@renewaire.com
To Place an Order E-mail: RenewaireOrders@renewaire.com

INDOOR AIR QUALITY MATTERS

- **Deficient IAQ** is an EPA **top-five** health risk
- People spend **90%** of their **time indoors**
- **Indoor air** can be 2-5 times and up to 100 times **more polluted than outdoor air**

BENEFITS OF INCREASED VENTILATION

BETTER HEALTH

IMPROVED COGNITIVE FUNCTION

INCREASED PRODUCTIVITY

TECHNICAL/APPLICATIONS SUPPORT

The goal of our technical-support team is to provide the **BEST CUSTOMER SERVICE** in the HVAC industry. You can count on our knowledgeable and seasoned staff for all your technical, application and service needs, and we'll respond quickly and effectively to answer any of your questions.

CONTACT RENEWAIRE

FOR TECHNICAL SUPPORT:
RenewaireSupport@renewaire.com

PHONE:
1.800.627.4499

FAX:
608.221.2824

TO PLACE AN ORDER:
CORES.renewaire.com
or
RenewaireOrders@renewaire.com

RenewAire® Energy Recovery Ventilation

RELEVANT **EVERYWHERE**

EVERY GEOGRAPHIC REGION
Our ERVs excel in every geographic region.

EVERY CLIMATE
Our ERVs operate in every climate—from Alaska to Florida, and everywhere in between.

EVERY PROJECT
From massive skyscrapers to cozy residential homes, our ERVs can be used in every size project and in every code jurisdiction.

RENEWAIRE **TEMPERS THE AIR**

Our **ERVs moderate the extremes of outdoor supply-air temperature and humidity year-round**, providing a sustainable solution for fresh air that feels like a perfect spring day.

APPLIED EVERYWHERE

When indoor occupants breathe in unclean air, this harms their health and causes cognitive impairment. Our ERVs can provide cleaner and healthier indoor air for every type of building in the world, thus improving occupants' wellbeing, while also reducing energy costs.

RESIDENTIAL
The increased airtightness of newer and remodeled homes is causing deficient IAQ, resulting in more health problems for indoor occupants.

COMMERCIAL
As commercial buildings become more airtight, deficient IAQ is increasing and causing sickness, absenteeism and decreased productivity.

HEALTHCARE
The high occupant density of hospitals, nursing homes and other healthcare facilities results in deficient IAQ and ensuing health problems for patients and staff alike.

RESTAURANTS/COFFEE SHOPS
The large volume of indoor occupants in restaurants and coffee shops causes deficient IAQ and subsequent health problems.

RETAIL
The high level of foot traffic in retail stores leads to deficient IAQ and the potential sickness of shoppers, which can negatively impact sales.

DAYCARE
Crowded daycare facilities breed deficient IAQ, thus causing health problems for everyone—especially children who are more vulnerable.

EDUCATION (LOWER AND HIGHER)
With students and teachers packed into tight classrooms, instances of deficient IAQ go up, resulting in academic performance and test scores going down.

GOVERNMENT
Aging and crowded government buildings result in deficient IAQ, which can impair worker performance and productivity.

EVERY TYPE OF BUILDING
Every type of building can benefit from the enhanced IAQ generated by RenewAire ERVs, including veterinary clinics, nail salons and manufacturing facilities, among others.

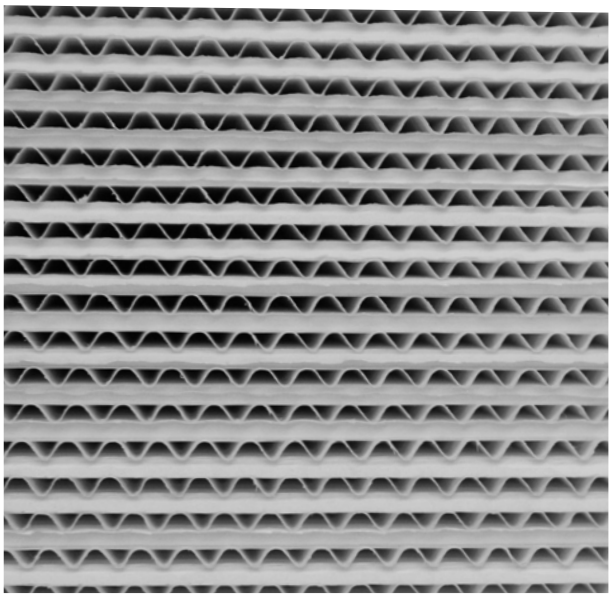

RENEWAIRE EVERYWHERE

RenewAire ERVs can be applied everywhere across all commercial, educational, institutional, light industrial and residential buildings. Our technology excels in every geographic region, every climate and every size project.

Soler&Palau Ventilation Group
Member of the S&P Group Family of Brands

RenewAire® Energy Recovery Ventilation

LIT115_02 (08/21)