GH SERIES Indirect Gas-Fired Duct Furnace

Installation, Operation and Maintenance Manual

GH-Series for Indoor and Outdoor Commercial Applications

GH Indoor Series shown

GH Rooftop Series shown

Intertek

⚠ WARNING

Do not store or use gasoline or other flammable vapors and liquids in the vicinity of this or any other appliance.

WHAT TO DO IF YOU SMELL GAS

- Do not try to light any appliance.
- Do not touch any electrical switch; do not use any phone in your building.
- Leave the building immediately.
- Immediately call your gas supplier from a phone remote from the building. Follow the gas supplier's instructions.
- If you cannot reach your gas supplier, call the fire department.

Installation and service must be performed by a qualified installer, service agency or the gas supplier.

⚠ AVERTISSEMENT

Ne pas entreposer ni utiliser d'essence ou autre vapeurs ou liquides inflammable à proximité de cet appareil ou de tout autre appareil.

QUE FAIRE SI VOUS SENTEZ UNE ODEUR DE GAZ

- Ne tentez pas d'allumer un appareil.
- Ne touchez pas à un interrupteur; n'utilisez pas de téléphone dans l'édifice où vous vous trouvez.
- Sortez de l'édifice immédiatement.
- Appelez immédiatement le fournisseur de gaz à partir d'un téléphone à l'exterieur de l'édifice. Suivez les instructions du fournisseur de gaz.
- Si vous ne pouvez joindre le fournisseur de gaz, appelez les pompiers.

L'installation at les réparations doivent être confiées à un installateur qualifié ou au fournisseur de gaz.

⚠ WARNING

ARC FLASH AND ELECTRIC SHOCK HAZARD

Arc flash and electric shock hazard. Disconnect all electric power supplies, verify with a voltmeter that electric power is off and wear protective equipment per NFPA 70E before working within electric control enclosure. Failure to comply can cause serious injury or death.

Customer must provide earth ground to unit, per NEC, CEC and local codes, as applicable.

Before proceeding with installation, read all instructions, verifying that all the parts are included and check the nameplate to be sure the voltage matches available utility power.

The line side of the disconnect switch contains live high-voltage.

The only way to ensure that there is NO voltage inside the unit is to install and open a remote disconnect switch and verify that power is off with a volt meter. Refer to unit electrical schematic.Follow all local codes.

⚠ AVERTISSEMENT

RISQUE FLASH D'ARC ET DE CHOC ÉLECTRIQUE

Risque d'arc êlectrique et de choc électrique. Débrancher toutes les alimentation électrique, vérifier avec un voltmètre que l'alimentation électrique est coupée et portez des vêtements de protection conformément à la norme NFPA 70E avant de travailler dans la console de commande électrique. Le non-respect peut entraîner des blessures graves ou la mort.

Le client doit fournir la terre à l'unité, selon les codes NEC, CEC et locaux, selon le cas.

Avant de procéder à l'installation, lisez toutes les instructions, vérifiez que toutes les pièces sont incluses at vérifier la plaque signalétique pour vous assurer que la tension correspond à la puissance disponible du réseau.

Le côté entrée du sectionneur contient une haute tension active.

La seule façon de s'assurer qu'il n'y a pas de tension à l'intérieur de l'unité est d'installer et d'ouvrir un interrupteur de déconnexion à distance et de vérifier que l'alimentation est coupée à l'aide d'un voltmètre. Réfère-vous au schéma électrique de l'appareil.

Suivez tous les codes locaux.

⚠ WARNING

RISK OF FIRE OR EXPLOSION

Do not install duct furnace where it may be exposed to potentially explosive or flammable vapors!

Do not store or use gasoline or other flammable vapors and liquids in the vicinity of this or any module.
Do not install in potentially explosive atmosphere laden with dust, sawdust or similar products.

⚠ AVERTISSEMENT

RISQUE D'INCENDIE OU D'EXPLOSION

N'installez pas le four à condoits là oùil peut être exposé à des vapeurs potentiellement explosives ou inflammables.

Ne stockez pas et n'utilisez pas d'essence ou d'autres vapeurs et liquides inflammables à proximité de ce module ou de tout autre module. Ne pas installer dans une atmosphère potentiellement explosive chargée de poussière, de sciure de bois ou de produits similaires.

⚠ CAUTION

RISK OF ELECTRIC SHOCK OR EQUIPMENT DAMAGE.

Whenever electrical wiring is connected, disconnected or changed, the power supply to the module and module controls must be disconnected. Lock and tag the disconnect switch or circuit breaker to prevent accidental reconnection of electric power.

⚠ ATTENTION

RISQUE DE CHOC ELECTRIQUE OU DE DOMMAGE D'APPAREIL

Chaque fois que le câblage électrique est connecté, déconnecté ou changé, l'alimentation électrique du module et des commandes du module doit être déconnectée. Verrouillez et étiquetez le sectionneur ou le disjoncteur pour éviter une reconnexion accidentelle de l'alimentation électrique.

⚠ CAUTION

Do not install units in locations where flue products can be drawn into adjacent building openings such as windows, fresh air intakes, etc. Distance from vent terminal to adjacent public walkways, adjacent buildings, operable windows and building openings shall conform with the local codes. In the absence of local codes, installation shall conform with the National Fuel Gas Code, ANSI Z223.1 or the Canadian CAN/CGA B-149 Installation Codes.

⚠ ATTENTION

N'installez pas les appareils dans des endroits où les produits de combustion peuvent être aspirés dans les ouvertures de bâtiment adjacentes, comme les fenêtres, les prises d'air frais, etc.

La distance entre le terminal de ventilation et les allées publiques adjacentes, les bâtiments adjacents, les fenêtres ouvrantes et les ouvertures de bâtiment doivent être conformes aux codes locaux. En l'absence de codes locaux, l'installation doit être conforme au Code national du gaz combustible, à la norme ANSI Z223.1 ou aux codes d'installation Canadiens CAN / CGA B-149.

⚠ CAUTION

Installation of wiring must conform with local building codes. In the absence of local building codes, installation must conform to the National Electric Code ANSI/NFPA 70 - Latest Edition. Unit must be electrically grounded in conformance with this code. In Canada, wiring must comply with CSA C22.1, Canadian Electrical Code.

⚠ ATTENTION

L'installation du câblage doit être conforme aux codes du bâtiment locaux. En l'absence de codes de construction locaux, l'installation doit être conforme au Code national de l'électricité ANSI/NFPA 70 - dernière édition. L'unité doit être mise à la terre électriquement conformément à ce code. Au Canada, le câblage doit être conforme à la norme CSA C22.1 du Code Canadien de l'électricité.

NOTICE

This equipment is to be installed by following Industry Best Practices and all applicable codes. Any damage to components, assemblies, subassemblies or the cabinet which is caused by improper installation practices will void the warranty.

IMPORTANT

Cet équipement doit être installé en suivant les meilleures pratiques de l'industrie et tous les codes applicables. Tout dommage aux composants, aux assemblages, aux sous-ensembles ou à l'armoire qui est causé par des pratiques d'installation incorrectes annulera la garantie.

NOTE: See additional cautions and warnings in Section 7, Gas Piping Installation.

REMARQUE: Voir les mises en garde et les avertissements supplémentaires de la Section 7, Installation de Tuyauterie de Gaz.

SAVE THIS MANUAL
UNIT RECORDS

Record information as shown below. In the unlikely event that factory assistance is ever required, this information will be needed.

Locate the RenewAire unit label, found inside the removable panel on the furnace.

NOTE: This information is for purposes of identifying the specific furnace. Unit-specific option data can then be obtained, as needed, from the Model Number. See Gas Furnace Code in this manual for further details.

NOTE: This page is to be completed by the installing contractor. The completed document is to be turned over to the owner after start-up.

Furnace Model No: ☐☐☐☐☐☐☐☐☐☐☐☐☐☐☐☐☐☐☐☐☐☐☐☐☐☐

Serial Number: ☐☐☐☐☐☐

Furnace Turndown:
- ☐ Single Stage
- ☐ Two-Stage
- ☐ Modulated 5:1
- ☐ Modulated 10:1

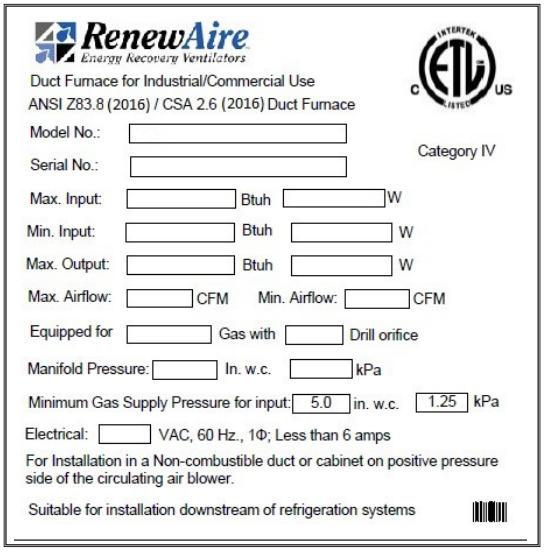
RenewAire
Energy Recovery Ventilators
Duct Furnace for Industrial/Commercial Use
ANSI Z83.8 (2016) / CSA 2.6 (2016) Duct Furnace
Model No.:
Serial No.:
Category IV
Max. Input: Btuh W
Min. Input: Btuh W
Max. Output: Btuh W
Max. Airflow: CFM Min. Airflow: CFM
Equipped for Gas with Drill orifice
Manifold Pressure: In. w.c. kPa
Minimum Gas Supply Pressure for input: 5.0 in. w.c. 1.25 kPa
Electrical: VAC, 60 Hz., 1Φ; Less than 6 amps
For Installation in a Non-combustible duct or cabinet on positive pressure side of the circulating air blower.
Suitable for installation downstream of refrigeration systems

TYPICAL UNIT LABEL (FOUND INSIDE THE REMOVABLE PANEL ON THE FURNACE)

TABLE OF ILLUSTRATIONS

INDIRECT GAS-FIRED DUCT FURNACE CONFIGURATION CODE

Each RenewAire Indirect Gas-Fired Duct furnace is assigned a 25 digit Model Number. The Model Number can be used to identify the various options as ordered by the customer.

Note: Not all options are available on every model.

MODEL NUMBER	G	H	-											H	T				1		-	S		-	-
DIGIT NUMBER	1	2	3	4	5	6	7	8	9	10	11	12	13	14	15	16	17	18	19	20	21	22	23	24	25

Digits 1–2:	Model
"GH" = Gas Furnace 50–400 MBH	

Digits 4–5:	Location
"IN" = Indoor	
"RT" = Rooftop	

Digits 6–7:	Vent Location
"SI" = Separated Top Indoor	
"KI" = Top Exhaust Indoor	
"WO" = Front Exhaust Outdoor	
"NO" = Top Exhaust Outdoor	

Digits 8–10:	Input Capacity in MBH
"050", "075", "100", "125", "150", "175", "200", "250", "300", "350", "400"	

Digit 11:	Fuel Type
"N" = Natural Gas (Standard)	
"P" = Propane	

Digits 12–13:	Tube Material
"SS" = 409 Stainless Steel (Standard)	
"CS" = 304 Stainless Steel	

Digit 14:	Airflow Orientation
"H" = Horizontal	

Digit 15:	Thermal Efficiency
"T" = 81%	

Digit 16:	Elevation
"S" = 0–2000' (Standard)	
"2" = 2001'–3000'	
"3" = 3001'–4000'	
"4" = 4001'–5000'	
"5" = 5001'–6000'	
"6" = 6001'–7000'	
"Y" = 7001' and above	

Digit 17:	Disconnect Switch
"N" = None (Standard)	
"D" = Disconnect Switch	

Digit 18:	System/Inducer Voltage
"1" = 115V	
"3" = 230V	

Digit 19:	Phase
"1" = Single Phase	

Digit 20:	Power Fusing (see Restriction 2)
"N" = None	
"F" = Fusing	

Digit 22:	Control Voltage
"S" = 24VAC	

Digit 23	Control Type (see Restriction 1)
"T" = Two Stage High/Low with Thermostat (Standard)	
"S" = Single Stage On/Off with Thermostat	
"E" = Modulating 5:1 (Natural Gas)/3:1 (Propane) with Thermostat	
"W" = Modulating 10:1 (Natural Gas)/6:1 (Propane) with Thermostat	
"2" = Two Stage High/Low without Thermostat	
"1" = Single Stage On/Off without Thermostat	
"M" = Modulating 5:1 (Natural Gas)/3:1 (Propane) without Thermostat	
"V" = Modulating 10:1 (Natural Gas)/6:1 (Propane) without Thermostat	

*NOTES:
Digits 3, 21, 24, & 25 are not used in this model.
All heaters come with standard features: Air Proving Switch, Auxiliary High Temperature Limit Switch
Descriptions of feature and options are found in the installation and operation manual.

Restrictions:
1: Control Type Code "V" & "W" not available with Input Capacity in MBH Codes "050", "075", "100", "125", "150", & "175".
2. Power Fusing Code “F” only available with Disconnect Switch Code “D”. Power Fusing Code “F” always selected when Disconnect Switch Code “D” is selected.

DEFINITIONS FOR CONFIGURATION CODE

Heater Type:

GH—indirect gas-fired duct furnace from 50 MBH up to 400 MBH

Location:

IN—indoor duct furnace

RT—outdoor duct furnace

Vent Location:

Separate Inlet Exhaust Indoor—indoor furnace combustion air vent connections are separately located on top of the furnace.

Top Exhaust Indoor—indoor furnace combustion air exhaust vent connection located on top of furnace. Combustion air intake is through louvers on front panel of furnace.

Front Exhaust Outdoor—outdoor furnace combustion air hood openings located on front panel of furnace. Combustion air intake through large hood on front panel and combustion air exhaust through small hood on front panel.

Top Exhaust Outdoor—outdoor furnace combustion air exhaust vent stack located on top of the furnace. Combustion air intake through large hood on front panel of furnace.

Input Capacity:

MBH—BTU per hour (÷1000) rating for furnace input capacity.

Input capacities are 50, 75, 100, 125, 150, 175, 200, 250, 300, 350, and 400.

Fuel Type:

Natural Gas (Standard)—natural gas used in most applications.

Propane (Option)—propane available.

Tube Material:

409 Stainless Steel (Standard)—provides excellent corrosion resistance at elevated temperatures and is more corrosion-resistant than aluminized steel.

304 Stainless Steel (Option)—higher chromium and nickel content than 409 stainless steel with superb corrosion resistance at elevated temperatures.

Airflow Orientation:

Horizontal—furnace installed where airflow in ductwork is horizontal through the heater.

Thermal Efficiency:

81% Efficiency—standard thermal efficiency for gas-fired duct furnace. Thermal efficiency is ratio of output capacity to input capacity.

Elevation:

0–2000 feet (Standard)—furnace burner orifices for operation up to 2000 ft. above sea level.

2001–6999 feet (Option)—furnace burner orifices for operation 2001-6999 ft. above sea level.

Above 7000 feet (Option)—furnace burner orifices for operation over 7000 ft. above sea level.

Disconnect Switch (Option):

Disconnect switch mounted on furnace to disconnect line voltage to furnace.

System/Inducer Voltage:

Single Phase—115V, 230V

Voltage Phase:

Single Phase only.

Power Fusing (Option):

Fuse block and fuses installed to protect system and draft inducer from over-amperage conditions.

Control Voltage:

24VAC (Standard)—secondary voltage

Control Type:

Two Stage High/Low Fire (Standard)—furnace initiates at 1st stage (low fire; 55% of full capacity). If additional heat is required then 2nd stage initiates (high fire; 100% capacity).

Can be ordered with 2-stage duct thermostat and sensor (standard) or without the thermostat.

Single Stage On/Off—furnace is either on or off to meet heat required.

Can be ordered with or without duct thermostat and sensor.

Modulating 5:1 Turndown (3:1 turndown for propane)—furnace operates from 20–100% of output capacity based on 0–10Vdc input.

Can be ordered with or without electronic analog thermostat and sensor.

Modulating 10:1 Turndown—(6:1 turndown for propane) furnace operates from 10%–100% of output capacity based on 0–10 VDC input.

Can be ordered with or without electronic analog thermostat and sensor.

Air Proving Switch: (Standard)

Air proving switch included for duct mounting upstream of the furnace. Prevents operation of the furnace in the event of no/low air flow in the duct. Required by safety certifying agencies.

Auxiliary High Temperature Limit Switch: (Standard)

Auxiliary high temperature limit switch included for duct mounting downstream of the furnace. Prevents operation of the furnace in the event of low air flow conditions resulting in elevated temperatures. Required by safety certifying agencies.

Automatic Reset Fixed Temperature High Limit Switch: (Standard)

Automatic reset limit switch included for primary over-temperature protection. Required by safety certifying agencies.

Combustion Air Pressure Switch: (Standard)

Combustion air pressure switch included to prove sufficient air flow is present. Required by safety certifying agencies.

Manual Reset Flame Rollout Switch: (Standard)

Manual reset flame rollout switch included to monitor presence of burner flame. Required by safety certifying agencies.

Direct Spark Ignition Control (Standard):

Direct spark ignition control monitors Call For Heat and ensures draft inducer fan is operating before spark commences and gas valve is energized for the ignition period. Once burner ignites and cross light and flame is detected, spark is shut off. During heating operation, the thermostat, pressure switch and main burner flame is constantly monitored for proper operation.

Terminal Block: (Standard)

High voltage terminal block and low voltage control terminal block included.

1.0 OVERVIEW

1.1 DESCRIPTION

NOTE: This unit is an indriect gas-fired duct furnace that will be referred to in this manual as a furnace.

NOTE: Within this manual, U.S. units of measure are given first and then the SI version is provided in brackets [ ].

The model GH indirect gas-fired duct furnace is available in two different series, one for indoor installations and the other for outdoor installations. Indoor models are available with either separate combustion whereby they draw combustion air directly from the outdoors, or they may draw combustion air directly through an integral vent. Furnaces can be ordered in several different BTU inputs and also a variety of control options. All furnaces produce a low pressure drop and are provided with a galvanized steel cabinet. The temperature rise across each furnace is 30–70˚F [-1.11–21.1˚C]. These furnaces may be installed and used individually or they may be installed to operate in conjunction with additional furnaces.

IMPORTANT

Furnace models that are designated for indoor installation should only be installed indoors. Furnace models that are designated for outdoor installation should only be installed outdoors.

THESE FURNACES COMPLY WITH ANSI Z83.8 AND CSA 2.6M Gas-Fired Duct Furnace

1.2 GAS SUPPLY

RenewAire gas-fired duct furnaces can be ordered with either natural gas or LP gas as a fuel source, not to exceed pressure of 13.5 inches water Column (InWC) [3,359 Pa]. For all furnaces:

- Natural gas supply pressure must be a minimum of 5 InWC [1244 Pa] and a maximum of 13.5 InWC [3359 Pa].
- LP gas supply pressure must be a minimum of 12 InWC [2986 Pa] and a maximum of 13.5 InWC [3359 Pa].
- If gas pressure exceeds 13.5 InWC [3359 Pa], an additional regulating valve must be field-supplied and installed.

1.3 ELECTRICAL SUPPLY

The furnace control system requires both line voltage and low voltage circuits with correct polarity and clean neutral and ground. Line voltage readings between L1 and Neutral as well as L1 and Ground should be within +/- 3 volts of the voltage rating on the furnace data label, found inside the removable door.

1.4 INPUT CAPACITY IN MBH

Gas furnace sizes are based upon the INPUT MBH (thousands of BTUs per hour [Watts]). This is a measure of heat energy available and is not to be confused with heat output, which is affected by the efficiency of the furnace. Furnaces are available in the following input capacities:

- 50 MBH [14,653 W]
- 75 MBH [21,980 W]
- 100 MBH [29,307 W]
- 125 MBH [36,633 W]
- 150 MBH [49,960 W]
- 175 MBH [51,287 W]
- 200 MBH [58,614 W]
- 250 MBH [73,267 W]
- 300 MBH [87,921 W]
- 350 MBH [102,574 W]
- 400 MBH [117,228 W]

NOTE: All furnaces are 81% efficient.

IMPORTANT

The furnace sizes shown above are rated for installation at altitudes up to 2,000 feet [610m]. Starting at altitudes above 2,000 feet [610m] appliances should be de-rated 4% and another 4% for each 1,000 feet [305m] of elevation above 2,000 feet. For example:
2000–2999 ft 4% derate 4000–4999 ft 12% derate 6000–6999 ft 20% derate

3000–3999 ft 8% derate 5000–5999 ft 16% derate 7000 ft and above consult factory

1.5 GAS FURNACE MODULATION (TURNDOWN)

Turndown is a gas furnace operating mode in which the input gas volume is reduced to provide more consistent heating of the Occupied Space. Example: a 200 MBH input furnace is being used to provide heat when ambient conditions call for only a small amount of added heat. Rather than the furnace running at full output for a brief period, the gas supply is reduced in order to provide a smaller heat output, which allows the furnace to run for a longer period, improving hysteresis. Each modulation scheme requires that the gas train be designed for that specific turndown scheme. Modulation of the gas supply typically involves a different gas valve or valves, some upgrade to the controls and a different gas manifold. RenewAire furnaces are available with the following options:

- Single stage, simple ON/OFF (available for 50–400 MBH)
- 2 stage HIGH/LOW (available for 50–400 MBH)
- 5:1 Modulation [Natural Gas]; 3:1 Modulation [Propane] (available for 50–400 MBH)
- 10:1 Modulation [Natural Gas]; 6:1 Modulation [Propane] (available for 200–400 MBH)

Furnaces are often identified as being either “staged” or “modulated”. A staged furnace is one that has either one or two predetermined stages of output. For 2-stage furnaces, a 2-stage valve is used that requires a signal to engage a solenoid on the valve body. A modulated furnace has a variable output, produced by a modulating valve. The modulating valve will produce a constantly variable output dependent on a 0–10 volt signal sent to the valve.

Furnace turndown is expressed as a ratio of the maximum to minimum heat output. Example: A furnace that can deliver as little as one tenth of its maximum rating is said to have a turndown ratio of 10:1.

1-Stage Furnaces:

These are simple ON/OFF furnaces. There is no turndown.

2:1 Turndown Furnaces:

These are typically staged furnaces and have two different output levels.
The two different outputs are accomplished using a 2-stage gas valve.

5:1 Turndown Furnaces:

These furnaces have a modulated output, meaning that the heat output will vary from maximum down to one fifth of maximum. The modulation is accomplished using a modulating valve and special controls.

10:1 Turndown Furnaces:

These furnaces have a modulated output, meaning that the heat output will vary from maximum down to one tenth of maximum. The modulation is accomplished using a modulating valve and special controls.

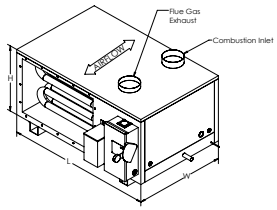

INDOOR SEPARATE INLET EXHAUST MODEL IN-SI

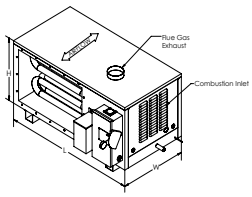

INDOOR TOP EXHAUST MODEL IN-KI

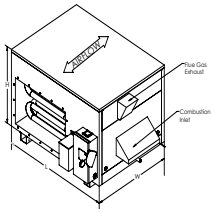

OUTDOOR FRONT EXHAUST MODEL RT-WO

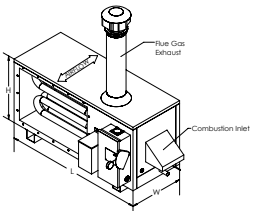

OUTDOOR TOP EXHAUST MODEL RT-NO

	RenewAire Furnace Model	1-Stage (ON/OFF) Available?	2-Stage (High/Low) Available?	Modulating (5:1 Turndown) Available?	Modulating (10:1 Turndown) Available?
	GH-050				
FURNACE VENT LOCATION	IN-S	YES	YES	YES	NO
	IN-K	YES	YES	YES	NO
	RT-WO	YES	YES	YES	NO
	RT-NO	YES	YES	YES	NO
	GH-075				
FURNACE VENT LOCATION	IN-S	YES	YES	YES	NO
	IN-K	YES	YES	YES	NO
	RT-WO	YES	YES	YES	NO
	RT-NO	YES	YES	YES	NO
	GH-100				
FURNACE VENT LOCATION	IN-S	YES	YES	YES	NO
	IN-K	YES	YES	YES	NO
	RT-WO	YES	YES	YES	NO
	RT-NO	YES	YES	YES	NO
	GH-125				
FURNACE VENT LOCATION	IN-S	YES	YES	YES	NO
	IN-K	YES	YES	YES	NO
	RT-WO	YES	YES	YES	NO
	RT-NO	YES	YES	YES	NO
	GH-150				
FURNACE VENT LOCATION	IN-S	YES	YES	YES	NO
	IN-K	YES	YES	YES	NO
	RT-WO	YES	YES	YES	NO
	RT-NO	YES	YES	YES	NO
	GH-175				
FURNACE VENT LOCATION	IN-S	YES	YES	YES	NO
	IN-K	YES	YES	YES	NO
	RT-WO	YES	YES	YES	NO
	RT-NO	YES	YES	YES	NO

	RenewAire Furnace Model	1-Stage (ON/OFF) Available?	2-Stage (High/Low) Available?	Modulating (5:1 Turndown) Available?	Modulating (10:1 Turndown) Available?
	GH-200				
	IN-S	YES	YES	YES	YES
	IN-K	YES	YES	YES	YES
	RT-WO	YES	YES	YES	YES
	RT-NO	YES	YES	YES	YES
	GH-250				
	IN-S	YES	YES	YES	YES
	IN-K	YES	YES	YES	YES
	RT-WO	YES	YES	YES	YES
	RT-NO	YES	YES	YES	YES
	GH-300				
	IN-S	YES	YES	YES	YES
	IN-K	YES	YES	YES	YES
	RT-WO	YES	YES	YES	YES
	RT-NO	YES	YES	YES	YES
	GH-350				
	IN-S	YES	YES	YES	YES
	IN-K	YES	YES	YES	YES
	RT-WO	YES	YES	YES	YES
	RT-NO	YES	YES	YES	YES
	GH-400				
	IN-S	YES	YES	YES	YES
	IN-K	YES	YES	YES	YES
	RT-WO	YES	YES	YES	YES
	RT-NO	YES	YES	YES	YES

FIGURE 1.5.0 CHART OF AVAILABLE TURNDOWN OPTIONS BY FURNACE MODEL

See figures below for examples of common installation approaches.

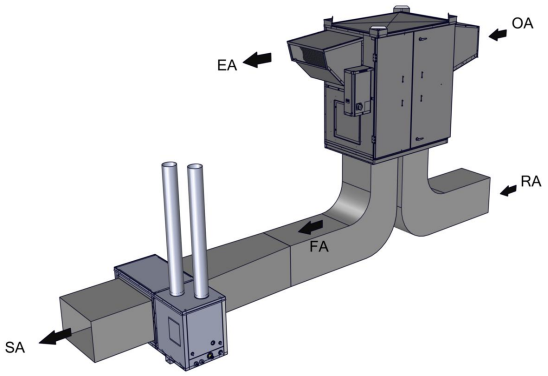

FIGURE 1.5.1 TYPICAL INSTALLATION OF INDOOR SEPARATE INLET EXHAUST FURNACE

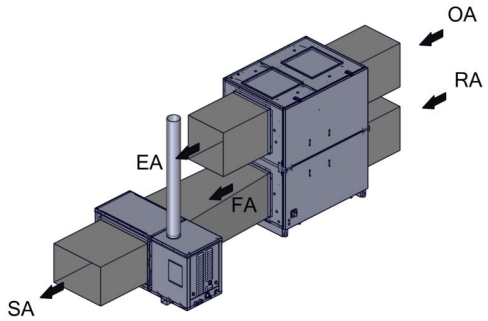

FIGURE 1.5.2 TYPICAL INSTALLATION OF INDOOR TOP EXHAUST FURNACE

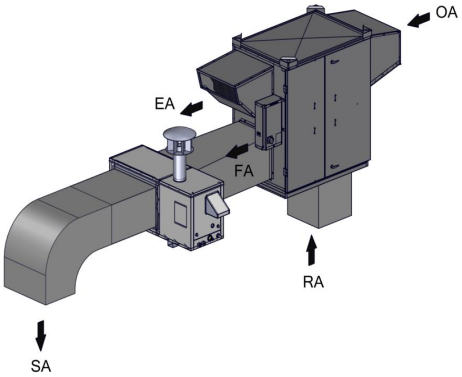

FIGURE 1.5.3 TYPICAL INSTALLATION OF OUTDOOR TOP EXHAUST FURNACE

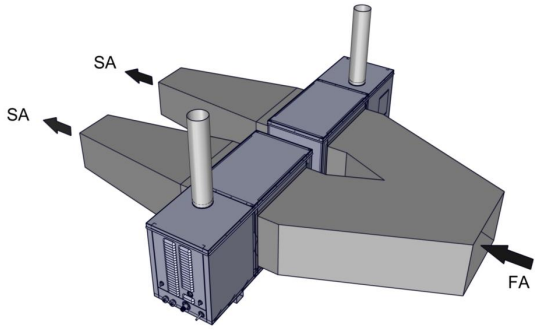

FIGURE 1.5.4 TYPICAL PARALLEL FURNACE INSTALLATION

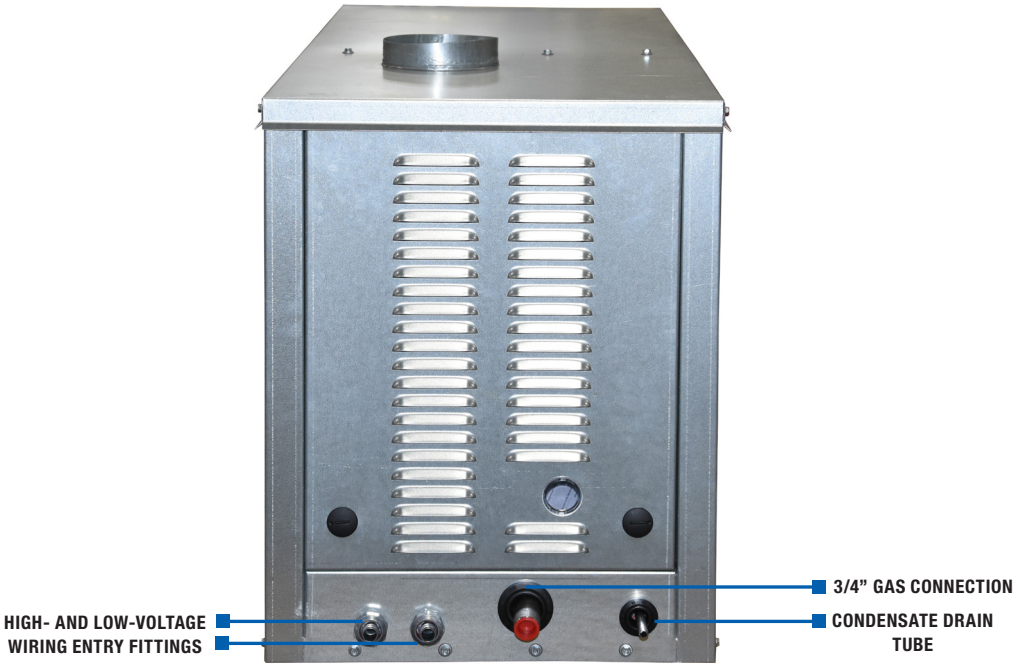

FIGURE 1.5.5 TYPICAL FACTORY-PROVIDED CONNECTION POINTS

1.6 SINGLE AND MULTIPLE FURNACE CONFIGURATIONS

Furnaces may be installed individually or in parallel. **ALL FURNACES MUST BE INSTALLED ON THE POSITIVE PRESSURE SIDE OF THE FAN.** Refer to the previous page for typical examples of common installation approaches. The maximum allowable discharge temperature is 160˚F [71˚C] for any installation. Maximum design duct static pressure is 3.0 InWC [746.5 Pa]. The examples below show recommended single and multiple furnace configurations.

Note that the examples below are based upon a specific Entering Air temperature. As Entering Air temperatures vary, the resulting temperature rise will also vary.

EXAMPLE 1—SINGLE FURNACE

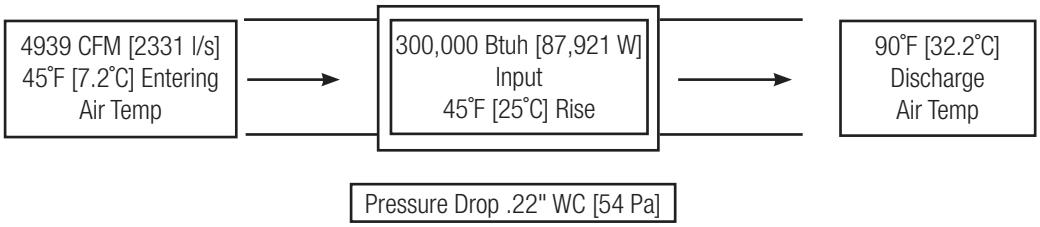

FIGURE 1.6.0 SINGLE UNIT—TOP VIEW

EXAMPLE 2—PARALLEL FURNACES

(KEEPS PRESSURE DROP (PD) LOW FOR LARGE CFM)

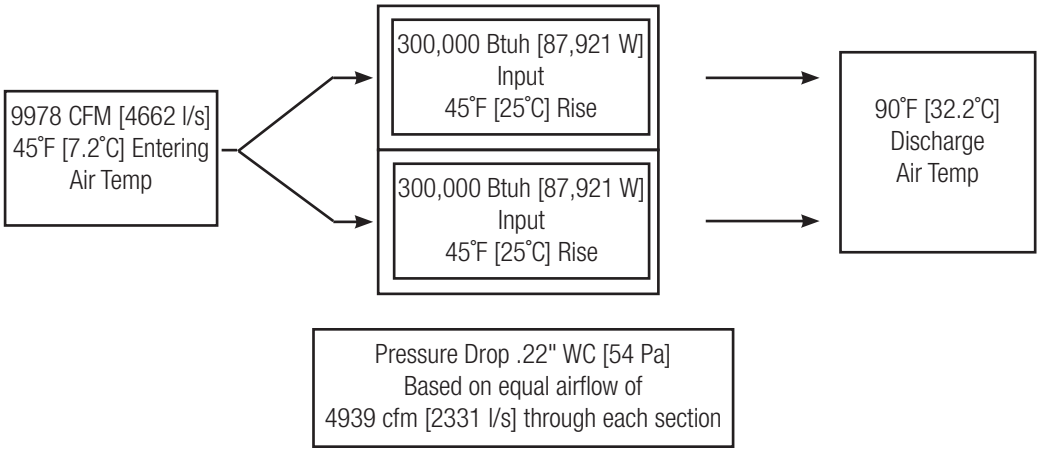

FIGURE 1.6.1 PARALLEL UNIT—TOP VIEW

1.7 USER INTERFACE

The User Interface (U/I) is the device that the owner uses to control operation of the furnace. Single and two-stage furnaces can be ordered with a 2-stage duct thermostat and sensor. Modulating furnaces can be ordered with an analog thermostat and sensor. The user interface may be a simple ON/OFF switch, a thermostat or even a Building Management System (BMS).

2.0 VENTING

2.1 EQUIVALENT LENGTH

Vent pipe lengths are given as “equivalent lengths”. When vent pipes are installed, they often require that an elbow(s) be installed as part of the vent pipe. Elbows restrict free flow of gases through the vent pipe. A 90˚ elbow added to a straight run of vent pipe is the equivalent of adding 5 feet [1.5m] of length to the vent and adding a 45˚ elbow is the equivalent of adding 2.5 feet [0.75m] in length.

Example: A horizontal vent is 6.5 feet [2m] long, but it has a 45 degree elbow in the middle. Its equivalent length is therefore 9 feet [2.75m] (6.5' + 2.5') [2.0m + 0.75m]. If this horizontal run of venting were being used in conjunction with a vertical run of venting, the minimum length of the vertical run must be 12 feet [3.66m] (horizontal equivalent length < 75% of vertical length).

NOTE: For assistance with vent sizing and design, contact a reputable company such as Precision Vent or Tjernlund.

2.2 INDOOR FURNACE VENTING

All duct furnaces must be connected to a venting system to convey flue gases outside of the building.

Vent systems must be sized and installed in accordance with ANSI Z223.1 (NFPA 54) or in Canada CAN/CGA-B149. There are three acceptable methods for venting indoor furnace installations:

- Vertical Indoor venting-uses building air for combustion, vent pipe run outdoors through single roof penetration.
- Horizontal Indoor venting-uses building air for combustion, vent pipe run outdoors through single wall penetration
- Separate Combustion 2-Pipe venting-uses outside air for combustion, vents outdoors–two roof or wall penetrations.

VERTICALLY VENTED DUCT FURNACES

Proper venting of the duct furnace is the responsibility of the installer. Vent piping is supplied by others. When operated with the venting system in place, proper duct furnace operation must be verified, including flue gas analysis of each connected furnace.

1. Use single wall or double wall (Type B) vent pipe of diameters shown below:
2. Maximize the height of the vertical run of vent pipe. A minimum of five (5) feet [1.5m] of vertical pipe is required. The top of the vent pipe must extend at least two (2) feet [0.61m] above the highest point on the roof. (Use Listed Type B vent for external runs).
3. An approved weatherproof vent cap must be installed to the vent termination.
4. Horizontal runs must not exceed 75% of the vertical height of the vent pipe, up to a maximum of ten (10) feet [3m]. Horizontal runs should be pitched downward ¼" per foot [21mm/m] and should be supported at 3 foot [1m] maximum intervals.
5. Design vent pipe runs to minimize the use of elbows. Each 90˚ elbow is equivalent to 5 feet [1.5m] of straight vent pipe run.
6. Vent pipe should not be run through unheated spaces. If such runs cannot be avoided, insulate vent pipe to prevent condensation inside vent pipe. Insulation should be a minimum of ½" [12.7mm] thick, foil faced material suitable for temperatures up to 500˚F [260˚C]
7. Dampers must not be used in vent piping runs. Spillage of flue gases into the occupied space could result.
8. Vent connectors serving Category 1 heaters must not be connected into any portion of a mechanical draft system operating under positive pressure.

INPUT RATING (Btuh)	INPUT RATING (W)	VENT PIPE DIA.
50,000–199,999	14,653–58,614	5 in. [12.7cm]
200,000–400,000	58,615–117,228	6 in. [15.25cm]

NOTE: For assistance with vent sizing and design, contact a reputable company such as Precision Vent or Tjernlund.

NOTE: All installations must comply with SMACNA guidlines.

NOTE: All ductwork and venting as shown in illustrations is supplied by others and field installed.

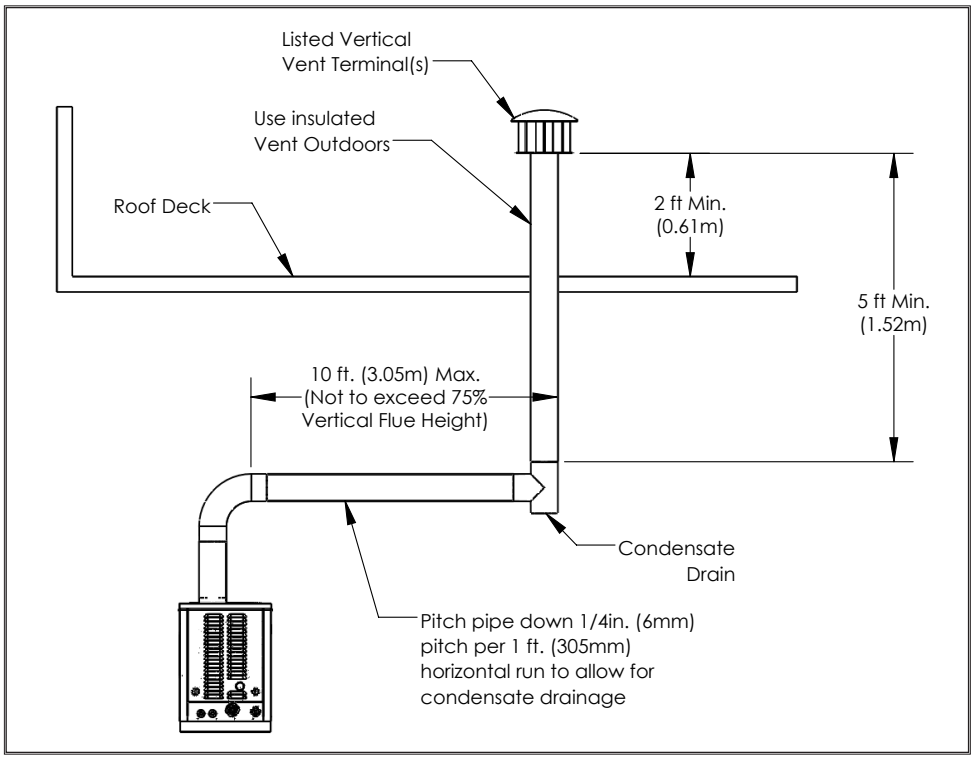

FIGURE 2.2.0 INDOOR VERTICAL VENTING

HORIZONTALLY VENTED DUCT FURNACES

Pressures in Category III venting systems are positive and therefore care must be taken to avoid flue products from entering the heated space. Use only vent materials and components that are UL listed and approved for Category III venting systems.

All vent pipe joints must be sealed to prevent leakage into the heated space. Follow instruction provided with approved venting materials used. The proper vent pipe diameter must be used, to insure proper venting of combustion products.

NOTE: A field-supplied and installed power vent may be required for vent runs longer than 50 equivalent feet [15.25M].

The total equivalent length of vent pipe must not exceed 50 ft. [15.25m]. Equivalent length is the total length of straight sections, plus 5 ft. [1.52m] for each 90˚ elbow and 2.5 ft [0.76m] for each 45˚ elbow.

The vent system must also be installed to prevent collection of condensate. Pitch horizontal pipe runs downward ¼ in. per foot [21mm/m] toward the outlet to permit condensate drainage. Insulate vent pipe exposed to cold air or routed through unheated areas. Insulate vent pipe runs longer than 10 ft. [3m]. Insulation should be a minimum of ½ in. [12mm] thick foil faced material suitable for temperatures up to 500˚F [260˚C]. Maintain 6 in. [152mm] clearance between vent pipe and combustible materials.

A vent cap listed for horizontal venting must be provided. Vent cap inlet diameter must be same as the required vent pipe diameter. The vent terminal must be at least 12 in. [305mm] from the exterior wall that it passes through to prevent degradation of building material by flue gases. The vent terminal must be located at least 1 ft. [305mm] above grade, or in snow areas, at least 3 ft. [1m] above snow line to prevent blockage. Additionally, the vent terminal must be installed with a minimum horizontal clearance of 4 ft. [1.2m] from electric meters, gas meters, regulators or relief equipment.

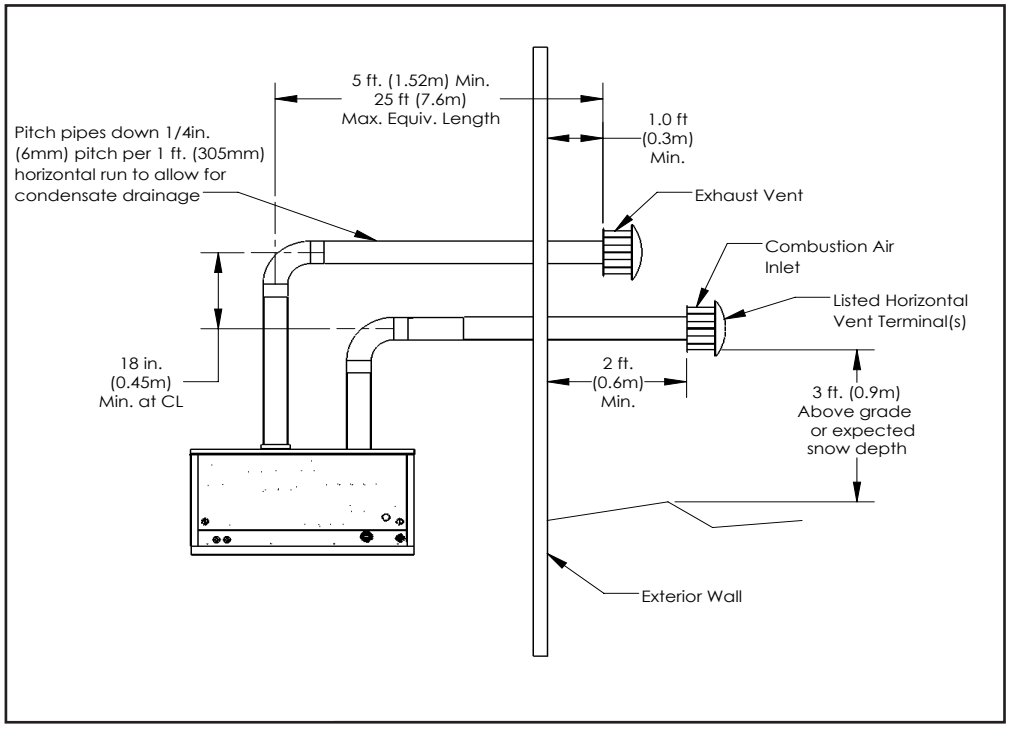

FIGURE 2.2.1 INDOOR HORIZONTAL VENTING

NOTE: For assistance with vent sizing and design, contact a reputable company such as Precision Vent or Tjernlund.

NOTE: All installations must comply with SMACNA guidelines.

NOTE: All ductwork and venting as shown in illustrations is supplied by others and field installed.

EACH DUCT FURNACE MUST HAVE ITS OWN INDIVIDUAL VENT PIPE AND TERMINAL. Do not connect vent system from horizontally vented units to other vent systems or a chimney.

Through the wall vents shall not terminate over public walkways, or over an area where condensate or vapor could create a nuisance or hazard.

TWO-PIPE SEPARATE COMBUSTION SYSTEMS

The furnace must be mounted with the burner section in a reasonably airtight vestibule compartment, as these systems provide combustion air from outside the heated space and vent the products of combustion outdoors. Additionally the heating unit must include the following:

1. A tooled door latch to ensure that door or panel is closed or in place during operation.
2. Approved vent terminals on both the supply air inlet and flue gas exhaust. NOTE: The inlet and outlet terminals must be located in the same pressure zone to provide for safe appliance operation.
3. For combustion air piping, use 24 gauge galvanized steel single wall pipe. Tape joints with aluminum foil tape and secure with corrosion resistant screws.
4. Inlet air pipe must be same size as exhaust vent pipe based on input ratings.
5. For exhaust venting, use 24 gauge galvanized single wall or Type B vent for vertically vented furnaces.
6. For exhaust venting, use only vent materials and components that are UL listed and approved for Category III vent systems when venting horizontally.
7. Exhaust and vent piping must not exceed a combined 50 equivalent feet [15.25m].

Proper installation of air inlet and flue gas exhaust piping are essential to proper operation of the duct furnace.

Separate combustion systems may not be common vented. Each furnace must have its own individual air supply and flue gas exhaust vent.

NOTE: For assistance with vent sizing and design, contact a reputable company such as Precision Vent or Tjernlund.

NOTE: All installations must comply with SMACNA guidelines.

NOTE: All ductwork and venting as shown in illustrations is supplied by others and field installed.

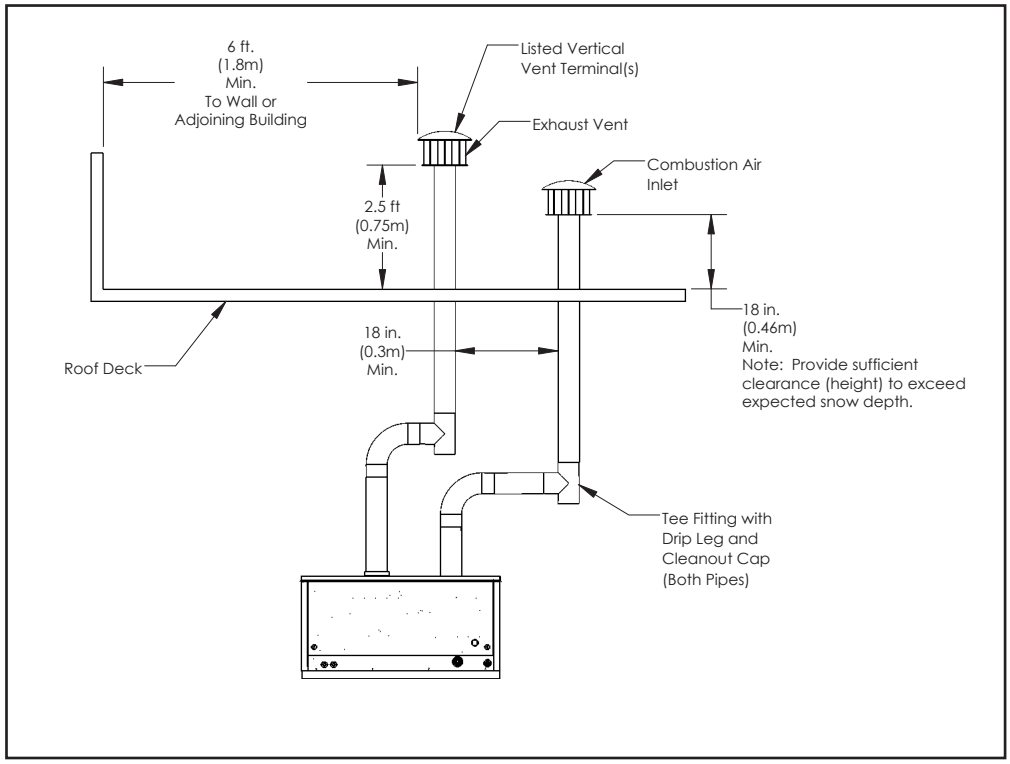

FIGURE 2.2.2 VERTICAL VENTING—SEPARATE COMBUSTION

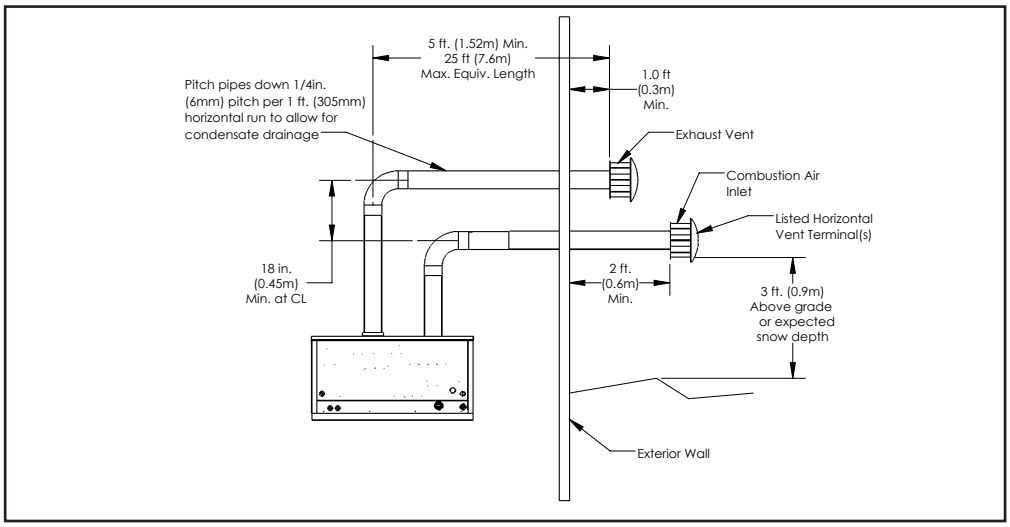

FIGURE 2.2.3 HORIZONTAL VENTING—SEPARATE COMBUSTION

NOTE: BE SURE THE VENT CAP USED FOR HORIZONTAL VENTING APPLICATIONS IS APPROVED FOR HORIZONTAL APPLICATION. CERTAIN MANUFACTURERS' VENT TERMINALS ARE APPROVED FOR VERTICAL INSTALLATION ONLY.

2.3 OUTDOOR FURNACE VENTING

Outdoor furnaces must be individually vented.

The venting system is designed for direct discharge of flue gases to the outdoors. The vent discharge opening should be located to provide an unobstructed discharge to the outside and should be located as far from the combustion air as possible, but in the same pressure zone.

Vent duct should pitch down toward outlet, to ensure that any condensate that occurs in the vent duct drains away from the combustion blower fan housing. The duct opening should be protected by a 1/2" x 1/2" screen. A fan hood is used over the discharge opening to prevent wind-driven rain from entering the vent duct, but should not intersect the flue gas discharge path.

Where sufficient clearance for proper horizontal venting cannot be provided, or in jurisdictions requiring a 4 foot [1.2m] separation between the flue gas discharge and combustion air inlet, flue gases should be vented vertically. Refer to illustration below for suitable venting method. A vent adapter is required to transition from the rectangular ID fan discharge to round vent pipe. Joints in the vestibule must be sealed.

Vent pipe must terminate at least 1 foot [0.3m] above the cabinet. The vent must be located on the same side of the furnace as the combustion air opening. Condensation in the vent pipe is likely during furnace start-up cycle and provision for drainage must be provided in closed vent piping.

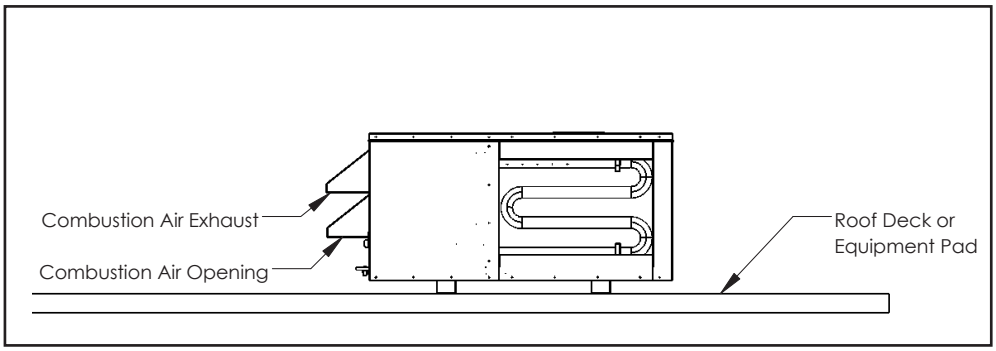

FIGURE 2.3.0 OUTDOOR HORIZONTAL VENTING

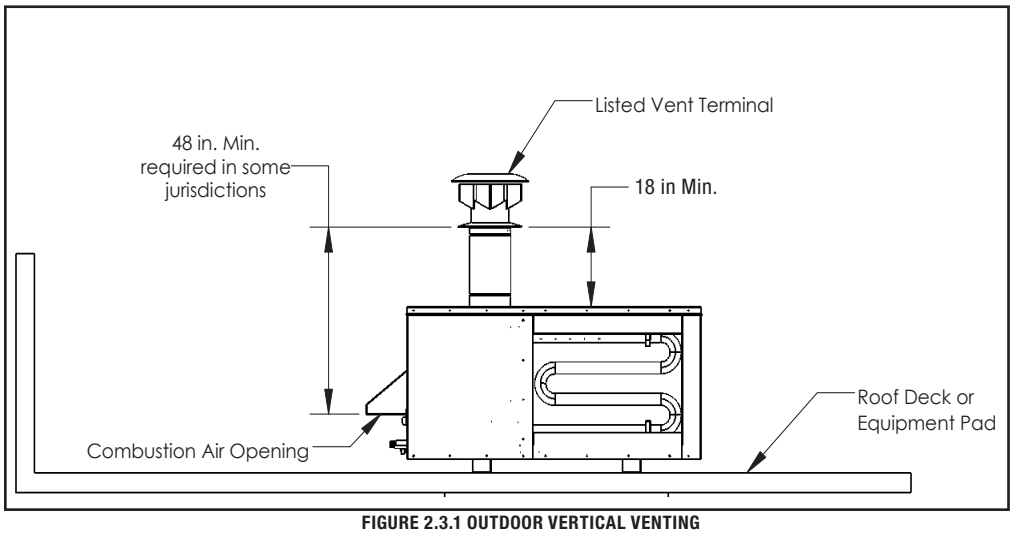

FIGURE 2.3.1 OUTDOOR VERTICAL VENTING

3.0 GAS SUPPLY

Installation of piping must conform with local building codes and ordinances, or, in the absence of local codes, with ANSI Z223.1, the National Fuel Gas Code. In Canada, installation must be in accordance with CAN/CGA-B149 for natural gas and B149.2 for propane units.

Gas piping must be sized for the total BTU input of all furnaces serviced by a single supply.

Be sure that gas regulators servicing more than one furnace have the proper pipe and internal orifice size for the total input of all furnaces serviced by the regulator.

See table below for minimum inlet gas pressure required and maximum permissible supply pressure at each furnace.

	Natural Gas	Propane Gas
Minimum (50 to 400 MBH models): [14,653 to 117,228 W]	5.0 InWC [1244 Pa]	11.0 InWC [2737 Pa]
Maximum Inlet Pressure:	13.5 InWC [3359 Pa]	13.5 InWC [3359 Pa]

Connect a fitting suitable for connection to a pressure gauge capable of measuring gas pressure to 1/8” NPT tap provided on the inlet side of the gas valve or manual shut-off tapping. Measure inlet pressure to each furnace serviced by a single regulator with all furnaces in operation.

Gas supply piping to multiple furnaces should be con Figured to provide equal pressure to all furnaces. With all furnaces operating at full output, minimum supply gas pressure should be checked at all furnaces.

A drip leg (sediment trap) and a manual shut off valve must be provided immediately upstream of the gas control on the heating unit. To facilitate servicing of the unit, installation of a union is recommended.

All gas supply and furnace connections must be leak tested prior to placing equipment in service.

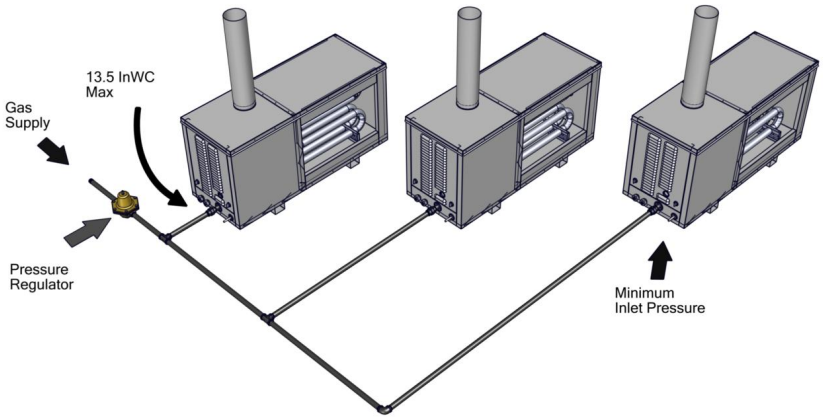

FIGURE 3.0.0 EXAMPLE OF MULTIPLE FURNACE SUPPLY GAS PIPING

4.0 PLACEMENT RECOMMENDATIONS

⚠ WARNING

RISK OF FIRE OR EXPLOSION!

Do not install duct furnace where it may be exposed to potentially explosive or flammable vapors!

Do not store or use gasoline or other flammable vapors and liquids in the vicinity of this or any furnace. Do not install in potentially explosive atmosphere laden with dust, sawdust or similar products.

⚠ CAUTION

RISK OF DAMAGE TO HEAT EXCHANGER AND PRODUCTION OF DANGEROUS GASES

Do not locate furnace in areas where corrosive vapors are present in the atmosphere or can be mixed with combustion air entering the furnace. Airborne contaminants can cause corrosion and shorten the life of the heat exchanger and components. Chlorinated hydrocarbon compounds (chlorine, hydrogen, and carbon), when exposed to high temperatures can cause phosgene gases, which are hazardous.

All duct furnaces must be installed on the positive pressure side of the circulating blower.

Furnaces must be installed in a level, horizontal position. Verify that structural support is adequate for the unit weight.

The heating section requires an ample supply of air for proper and safe combustion of the fuel gas. Do not block or obstruct air openings to the area where the heating unit is installed. Locate the unit to ensure an adequate supply of fresh air to replace air used in the combustion and ventilation process.

Observe unit clearances as shown in Section 7.5.

5.0 DUCTWORK

Ductwork should be sized to fit the openings on the duct furnace. Uniform airflow distribution over the heat exchanger is essential for proper operation and optimum unit efficiency. Use of baffles and/or turning vanes may be required to provide uniform air flow through the heating unit. See Ductwork Configuration drawings. Observe recommended spacing from circulated air blower to heating unit. Locating the circulating air blower too close to the furnace creates uneven airflow over the heat exchanger resulting in poor performance and possible damage to heat exchanger from localized overheating.

Ductwork is to be fastened directly to the body of the furnace and then sealed, using Industry Best Practices/SMACNA guidelines. Ductwork adjacent to the furnace (both upstream and downstream) should have a removable service panel installed to allow inspection of the heat exchanger tubes during annual maintenance.

NOTE: All duct installations must comform to SMACNA guidelines.

NOTE: All duct layouts depicted in this manual are suggested and may be modified to accomodate field conditions.

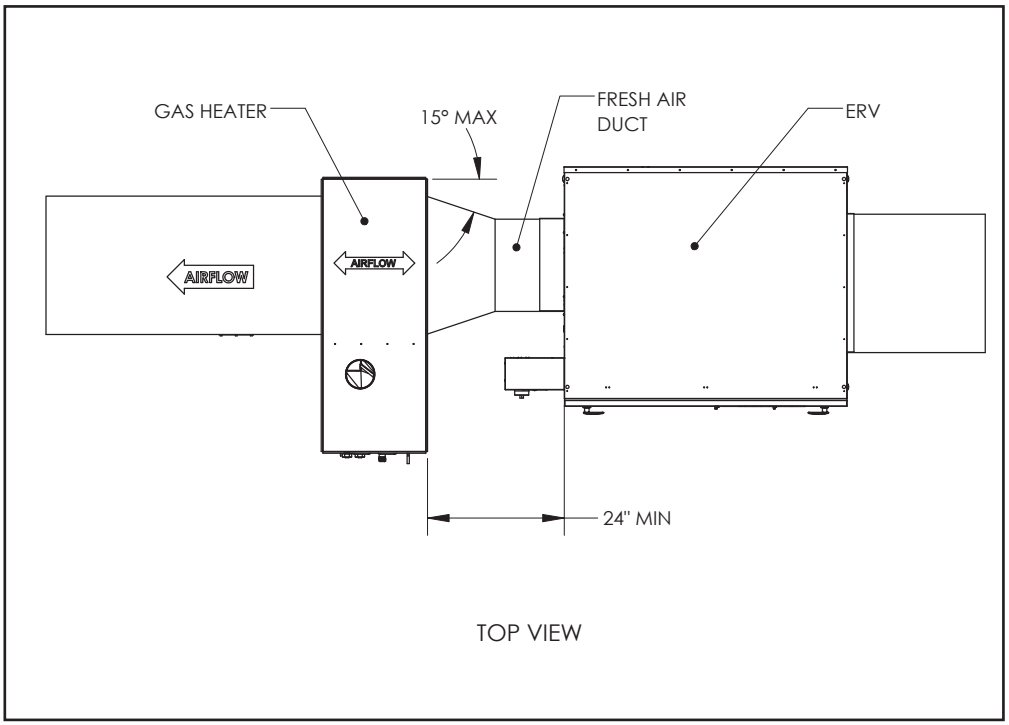

FIGURE 5.0.0 DUCTWORK CONFIGURATION EXAMPLE A

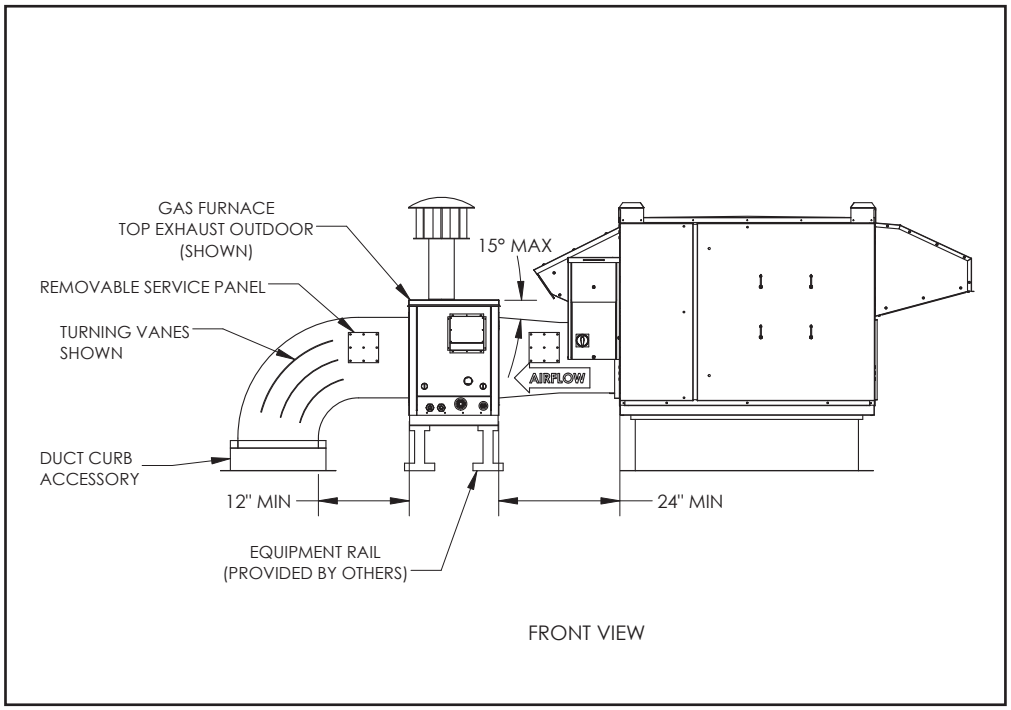

FIGURE 5.0.1 DUCTWORK CONFIGURATION EXAMPLE B

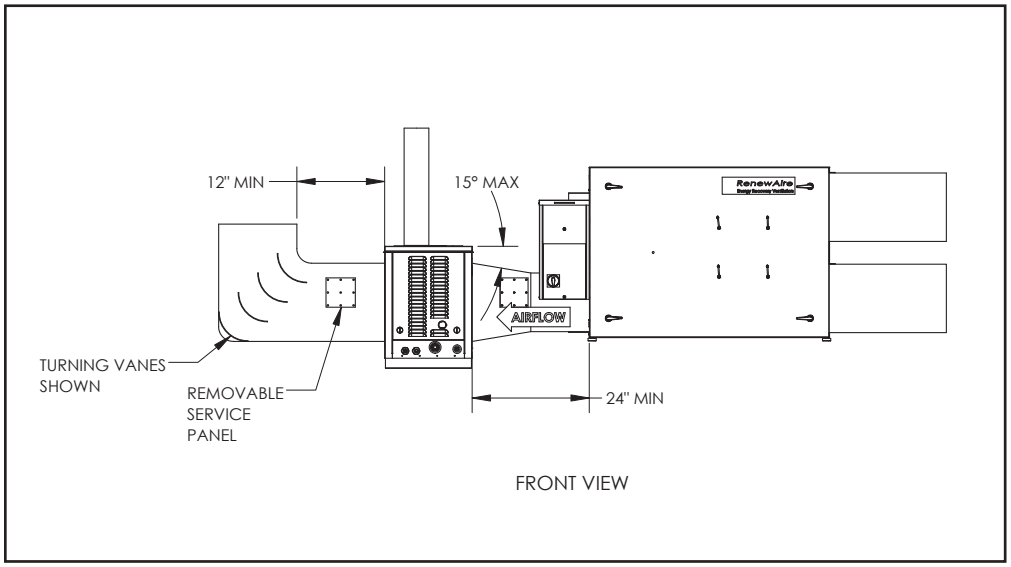

FIGURE 5.0.2 DUCTWORK CONFIGURATION EXAMPLE C

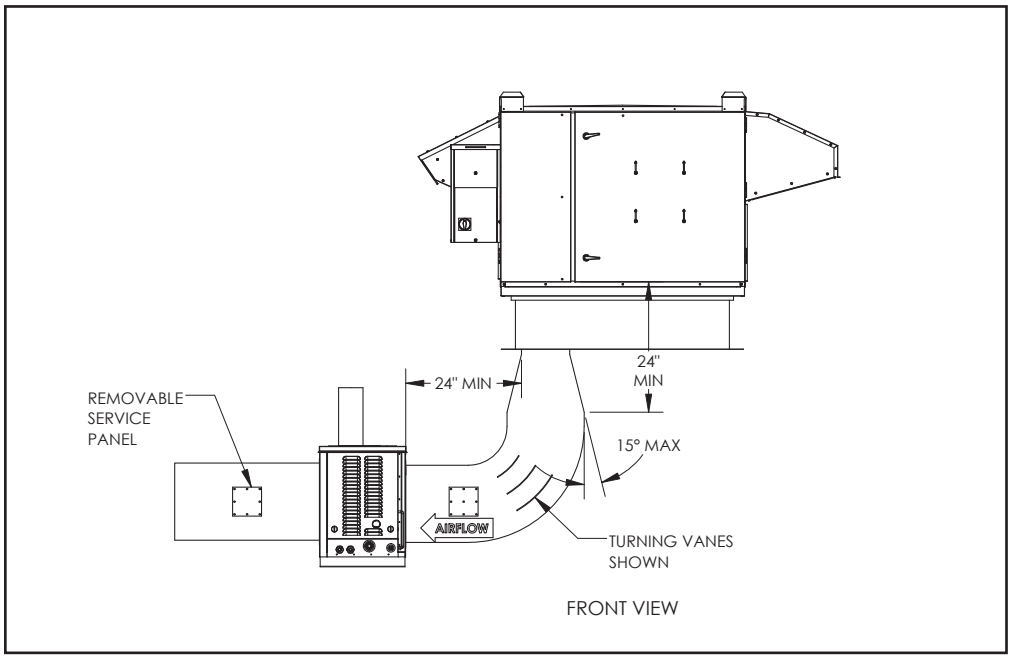

FIGURE 5.0.3 DUCTWORK CONFIGURATION EXAMPLE D

6.0 COMPONENT TECHNICAL DATA

6.1 PERFORMANCE DATA

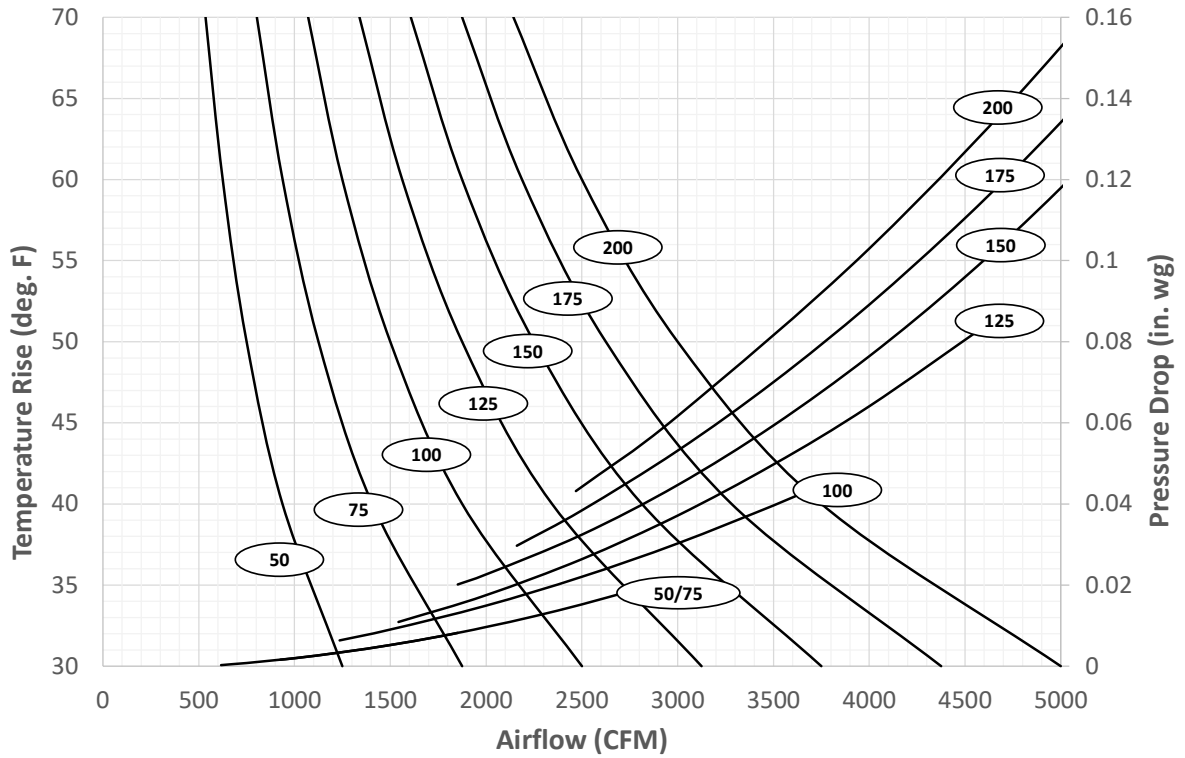

FIGURE 6.1.0 50–200 MBH TEMPERATURE AND PRESSURE CHART

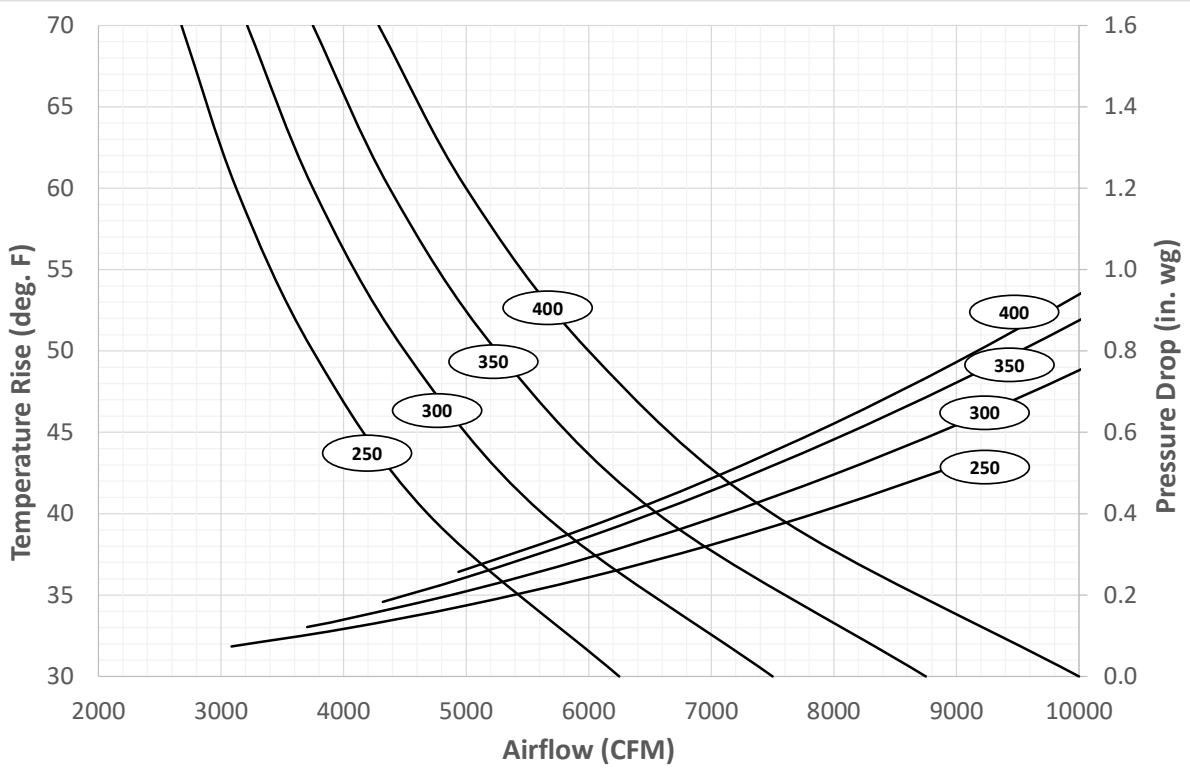

FIGURE 6.1.1 250–400 MBH TEMPERATURE AND PRESSURE CHART

6.2 FURNACE SIZE SELECTION

Furnace sizes are specified according to Input MBH. To select the correct furnace size, it is necessary to determine the required heat output in BTU/Hr and then apply the efficiency rating of the furnace to that output to determine the correct furnace size, measured in Input MBH. The required heat output has to incorporporate a correct airflow, correct temperature rise and acceptable pressure drop. The pressure drop can be determined by using the Temperature and Pressure charts on the previous page.

The steps in sizing a furnace are:

Step 1: Calculate the required output using:
Output (Btu/Hr) = 1.08 x Airflow (cfm) x Temperature Rise (˚F)

Step 2: Convert the required output from Btu/Hr to MBH by using the results from Step 1:
Divide the required output in Btu/Hr (found in Step 1) by 1,000

Step 3: Calulate the minimum Input MBH:
Divide the output MBH (found in Step 2) by the furnace efficiency (81%)

Step 4: From the results of Step 3, select a furnace rated for the next input size larger than the minimum required (found in Step 3).

Example:

An installation requires an airflow rate of 3000 cfm and a temperature rise ΔT (˚F) of 30.

Step 1: Calculate required output in Btu/Hr using

Required output (Btu/Hr) = 1.08 x 3000 x 30 = 97,200 Btu/Hr

Step 2: Convert the required output from Btu/Hr to MBH by using the results from Step 1:

Required output (MBH) = 97,200/1000 = 97.2 MBH

Step 3: Calculate the required Input MBH using

Input MBH = 97.2/0.81 = 120 MBH

Step 4: Select a furnace rated for the next larger input size, which would be GH 125 (125 MBH).

Once a furnace has been selected, identify the correct furnace on the Temperature and Pressure charts shown on the previous page. Each furnace is represented by two curved lines. One curved line shows the temperature rise that the furnace produces at different airflow rates. The temperature rise is greater when the airflow is less. The second curved line shows the pressure drop at different airflow rates. The pressure drop increases as the airflow increases. Example: A 125 MBH furnace as shown in the upper chart on the previous page is intended to run at 3000 cfm. At 3000 cfm, the Temperature Rise line shows that there will be a temperature rise of about 31˚F. The Pressure Drop line shows that at 3000 cfm, there will be a pressure drop of 0.036 InWC.

6.3 MAXIMUM AND MINIMUM AIRFLOWS

For every duct furnace, there is a range of airflow that must be maintained in order to produce an acceptable ΔT temperature rise and acceptable pressure drop. If the airflow is too low, the resulting temperature rise will be too high. If the airflow is too high, the ΔT will be inadequate. The temperature rise that should occur must be at least 30˚F and less than 70˚F.

To determine the minimum airflow in a furnace:

Minimum airflow (cfm) = furnace size (MBH) x 1000 x furnace efficiency (81%)/1.08 x 70 (˚F)

To determine the maximum airflow in a furnace:

Maximum airflow (cfm) = furnace size (MBH) X 1000 x furnace efficiency (81%)/1.08 x 30 (˚F)

6.4 DUCT FURNACE PRESSURE DROP

For every duct furnace, the airflow through the furnace encounters resistance and this produces a drop in pressure between the inlet side and the exhaust side. The greater the airflow through the furnace, the greater the pressure drop from one side of the furnace to the other.

To determine the pressure drop across a furnace, use the Temperature and Pressure charts shown in section 6.1 of this manual. Find the airflow in cfm, shown at the bottom of each chart. Follow the grid line up until it intersects with the Pressure Drop line for the desired furnace. Use the example shown in Section 6.2 of this manual as an illustration.

6.5 DIMENSIONED DRAWINGS

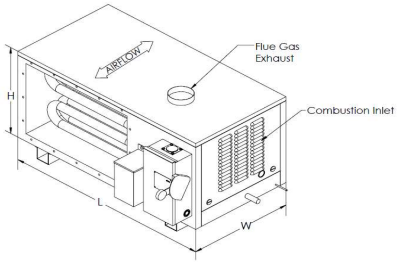

IN-KI

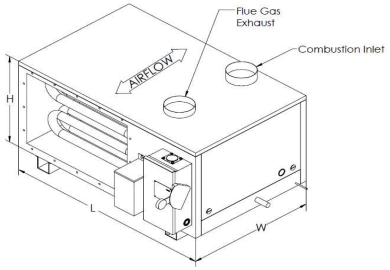

IN-SI

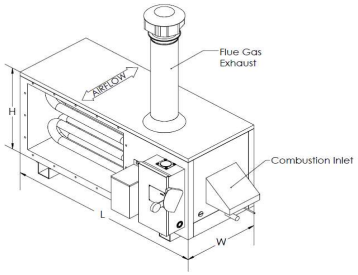

RT-NO

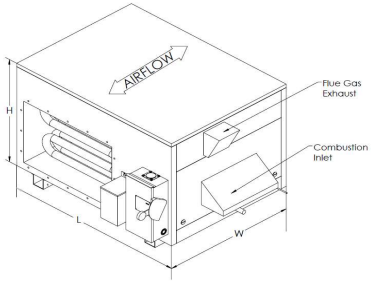

RT-WO

							Vent Locations							
							IN-KI, IN-SI, RT-NO, RT-WO	IN-KI, IN-SI, RT-NO		RT-WO				
Model No.	Input Rate	Output	Temperature Rise		Air Flow @ Nom. Duct Opening		Width	Length	Height	Length	Height	Diameter	Weight-Installed	Weight-Shipping
(No. of Tubes)			Min.	Max.	Min.	Max.	"W"	"L"	"H"	"L"	"H"	"D"		
	Btuh	Btuh	°F	°F	CFM	CFM	inch	inch	inch	inch	inch	inch	lb	lb
GH-050 (3)	50,000	40,500			536	1250	15.75						127	207
GH-075 (3)	75,000	60,750			804	1875	15.75						127	207
GH-100 (4)	100,000	81,000			1071	2500	18.50						147	227
GH-125 (5)	125,000	101,250			1339	3125	21.25					5	186	266
GH-150 (6)	150,000	121,500			1607	3750	24.00						213	293
GH-175 (7)	175,000	141,750	30	70	1875	4375	26.75	47.22	21.96	48.16	29.96		233	313
GH-200 (8)	200,000	162,000			2143	5000	29.50						263	343
GH-250 (10)	250,000	202,500			2679	6250	35.00						333	413
GH-300 (12)	300,000	243,000			3214	7500	40.50					6	391	496
GH-350 (14)	350,000	283,500			3750	8750	46.00						443	548
GH-400 (15)	400,000	324,000			4286	10000	48.75						460	565

FIGURE 6.5.0 DIMENSIONED DRAWINGS OF DUCT FURNACES

6.6 GAS TRAIN SCHEMATICS

NOTE: The gas train is defined as the structure that all gases pass through, going from the gas inlet to the exhaust side of the collector box.

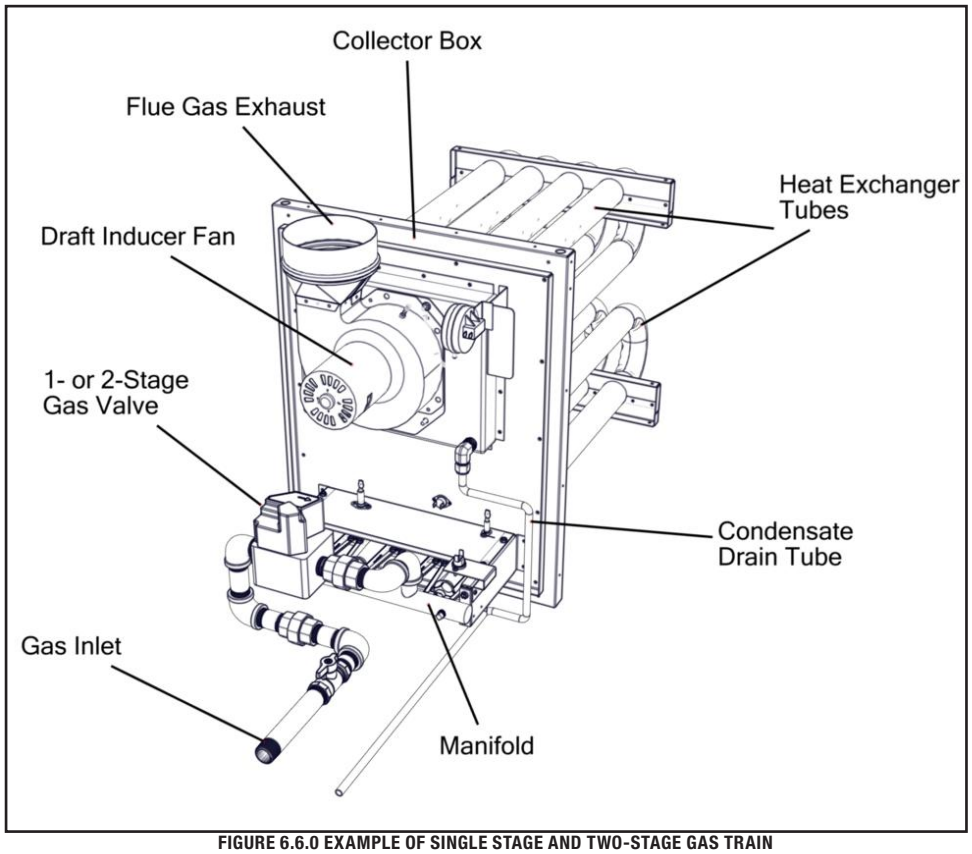

FIGURE 6.6.0 EXAMPLE OF SINGLE STAGE AND TWO-STAGE GAS TRAIN

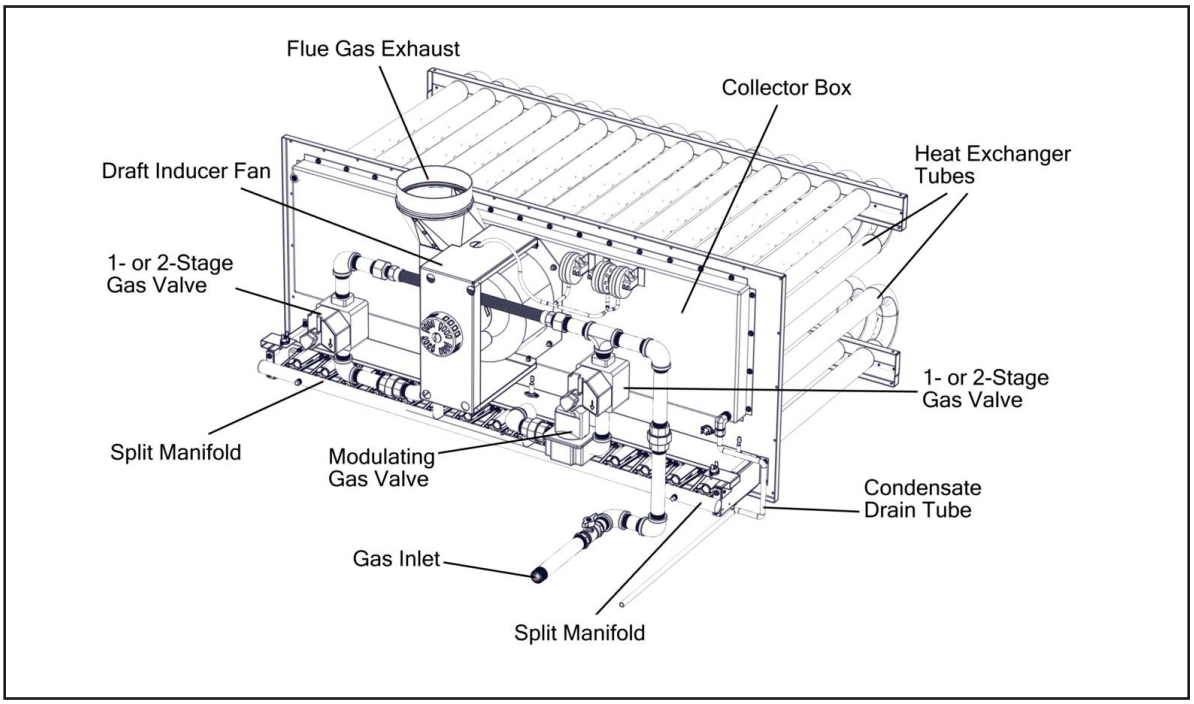

FIGURE 6.6.1 EXAMPLE OF MODULATED GAS TRAIN

6.7 GAS VALVE ILLUSTRATIONS

Photographs are typical of valves used. Actual valve models vary by installation.

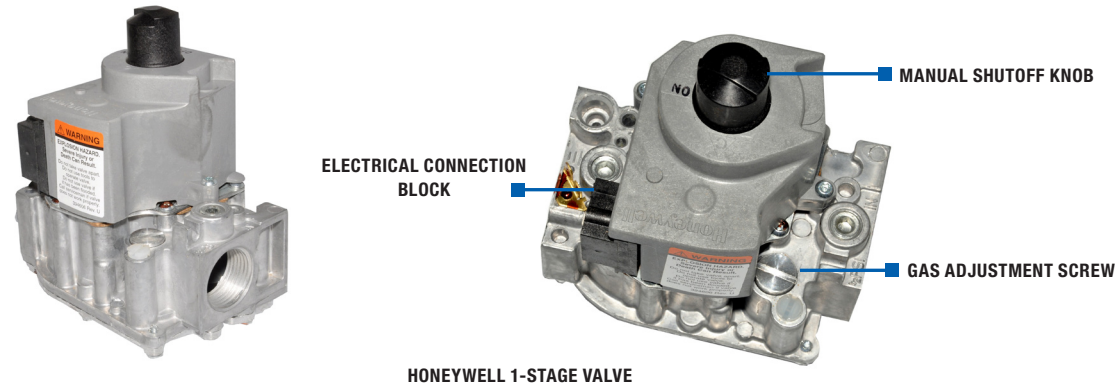

HONEYWELL 1-STAGE VALVE

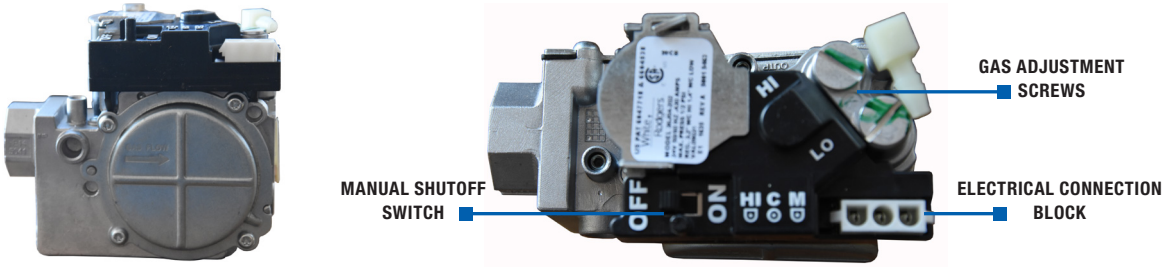

WHITE RODGERS 1-STAGE VALVE

FIGURE 6.7.0 SINGLE STAGE GAS VALVES (TYPICAL)

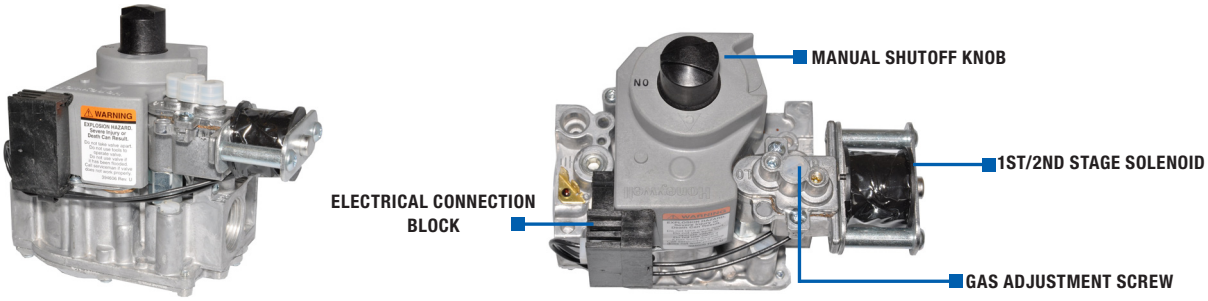

HONEYWELL 2-STAGE VALVE

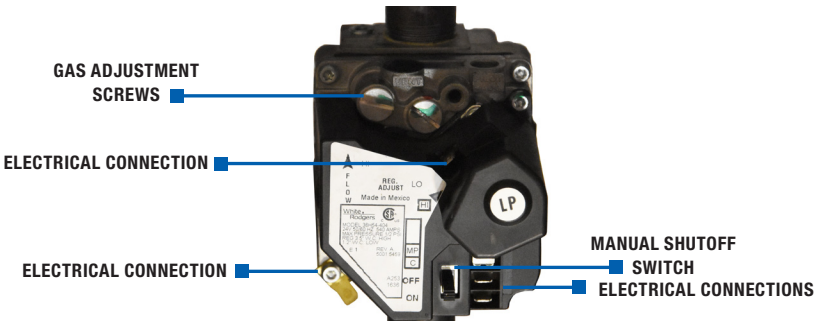

WHITE RODGERS 2-STAGE VALVE

FIGURE 6.7.1 TWO-STAGE GAS VALVES (TYPICAL)

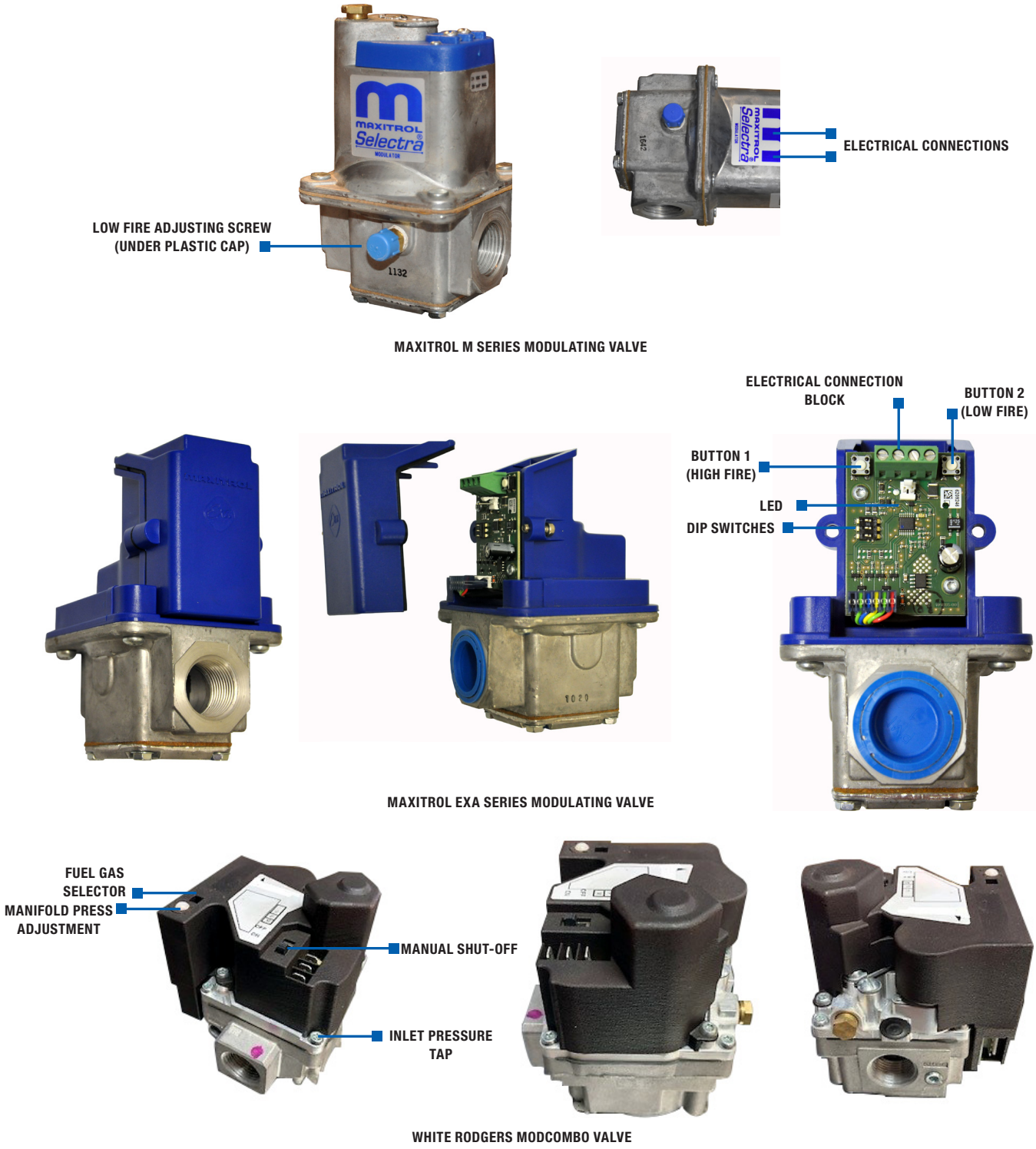

FIGURE 6.7.2 MODULATING GAS VALVES (TYPICAL)

6.8 ELECTRICAL DATA

⚠ WARNING

RISK OF FIRE, ELECTRIC SHOCK OR INJURY

Before servicing or cleaning the furnace, switch power off at the disconnect switch or service panel and lock-out/tag-out to prevent power from being switched on accidentally. More than one disconnect switch may be required to de-energize the equipment for servicing.

Installation work and electrical wiring must be done by qualified professionals in accordance with all applicable codes, standards, and licensing requirements.

Any structural alterations necessary for installation must comply with all applicable building, health, and safety code requirements.

When cutting or drilling into wall or ceiling, do not damage electrical wiring and other hidden utilities.

Use the furnace only in the manner intended by the manufacturer. If you have questions, contact the manufacturer.

Electrical specifications are as shown in the chart below. Use conduit, strain reliefs, etc., as required by code to secure the field wiring. Separate electrical wire entry fittings are provided on the front of the unit for line voltage wires and low voltage control wires.

Models	GH 050, 075, 100, 125, 150, 175		
Input Voltage	Furnace FLA		
	Staged	5:1 Modulating	10:1 Modulating
115 VAC	2.4	2.4	2.4
230 VAC	1.5	1.5	1.5

Models	GH 200, 250, 300, 350, 400		
Input Voltage	Furnace FLA		
	Staged	5:1 Modulating	10:1 Modulating
115 VAC	4.0	4.0	4.0
230 VAC	2.4	2.4	2.4

All furnaces are equipped with a Class II 24VAC power supply system that operates the furnace internal controls.

IMPORTANT

Do not use the gas furnace transformer(s) to power external controls. Use the ERV low voltage 24VAC transformer or an external supplied 24VAC transformer.

IMPORTANT

If external controls are to be powered by the RenewAire ERV low voltage 24VAC transformer or external supplied 24VAC transformer then follow the requirements for those transformers regarding wire length, wire gauge, and power draw.

6.9 ELECTRICAL SCHEMATICS

NOTE: Furnace-specific wiring schematics are provided with each unit and can be found in the document package shipped with the unit.

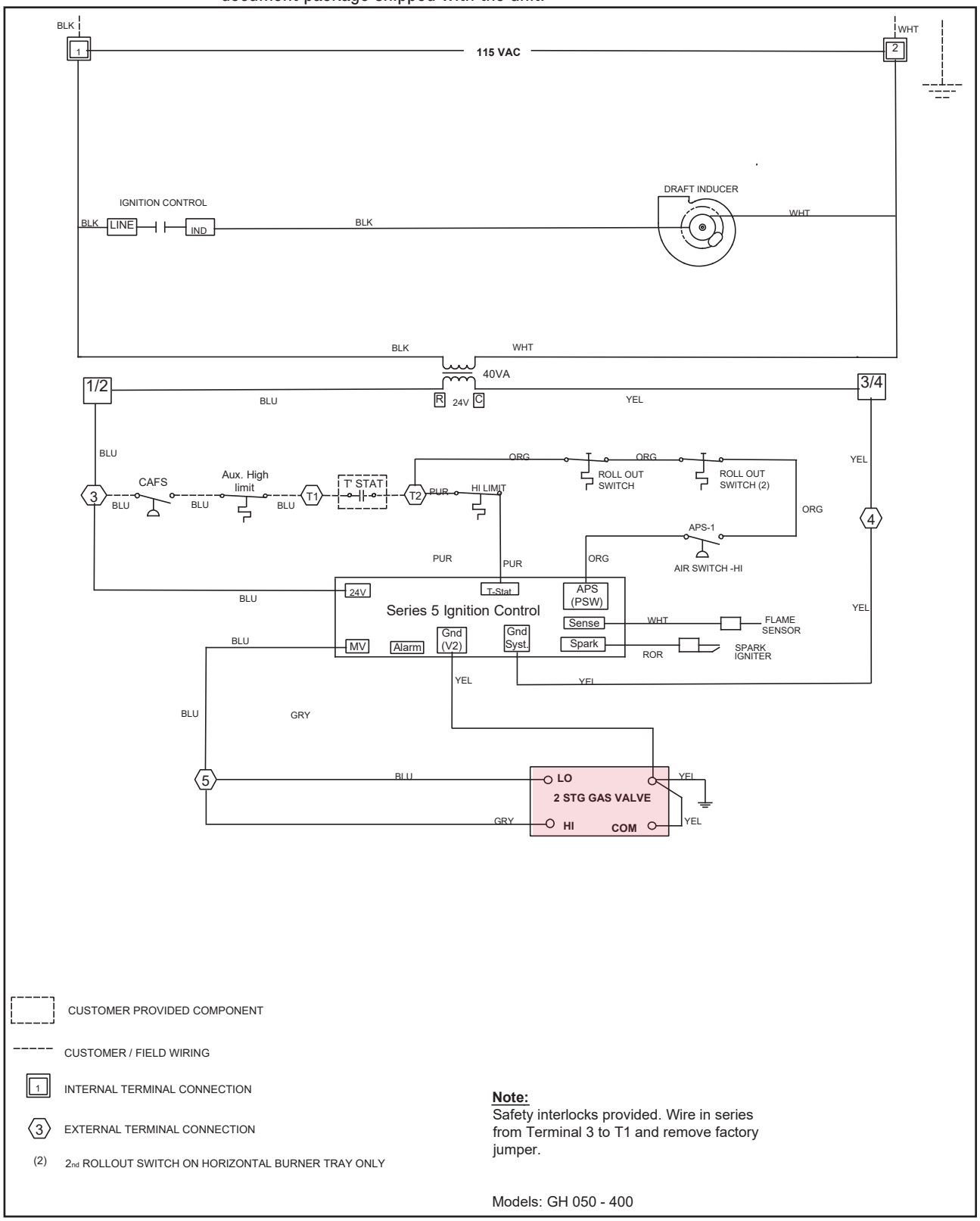

FIGURE 6.9.0 CONTROL WIRING, 1-STAGE FURNACE

NOTE: Furnace-specific wiring schematics are provided with each unit and can be found in the document package shipped with the unit.

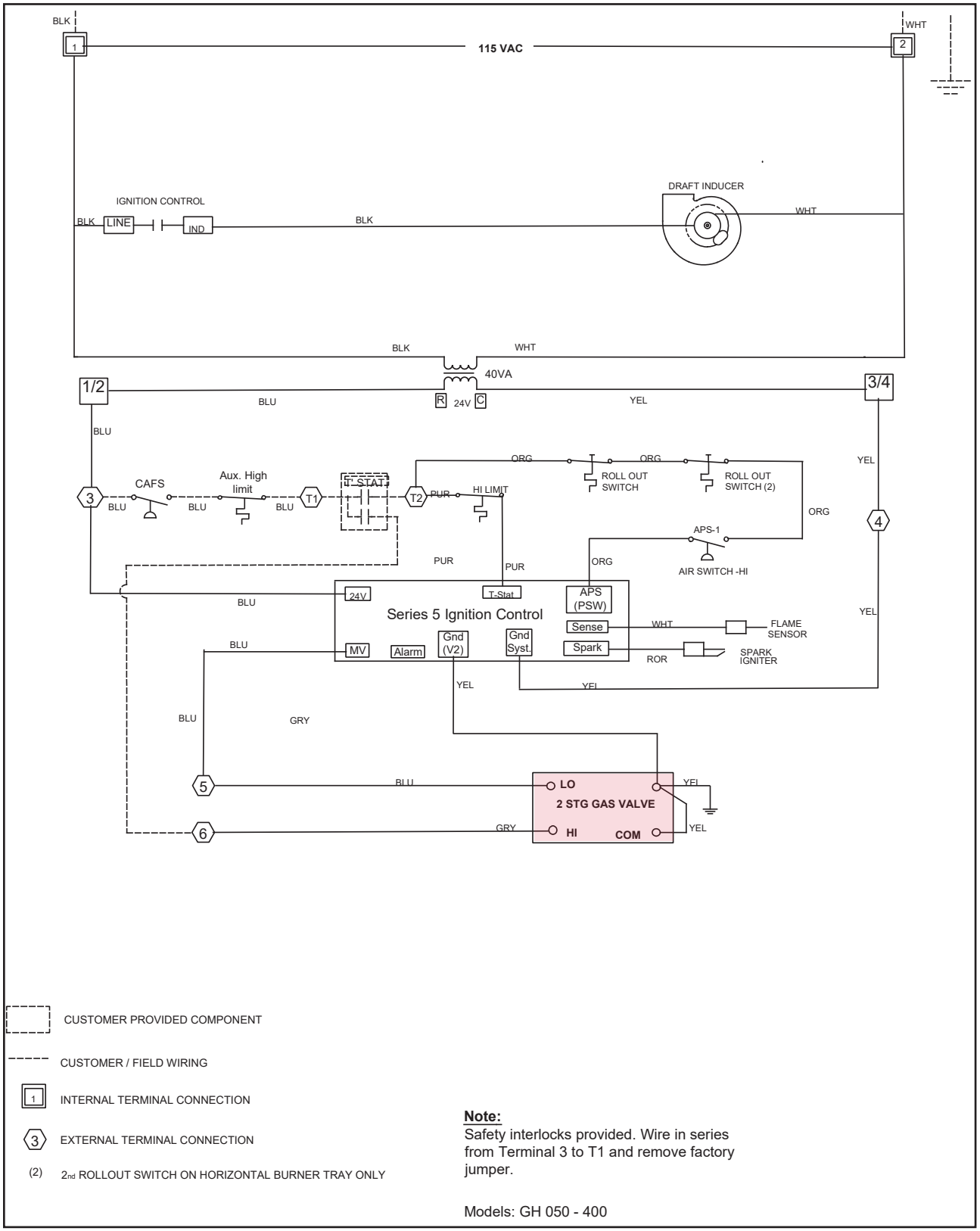

FIGURE 6.9.1 CONTROL WIRING, 2-STAGE FURNACE

NOTE: Furnace-specific wiring schematics are provided with each unit and can be found in the document package shipped with the unit.

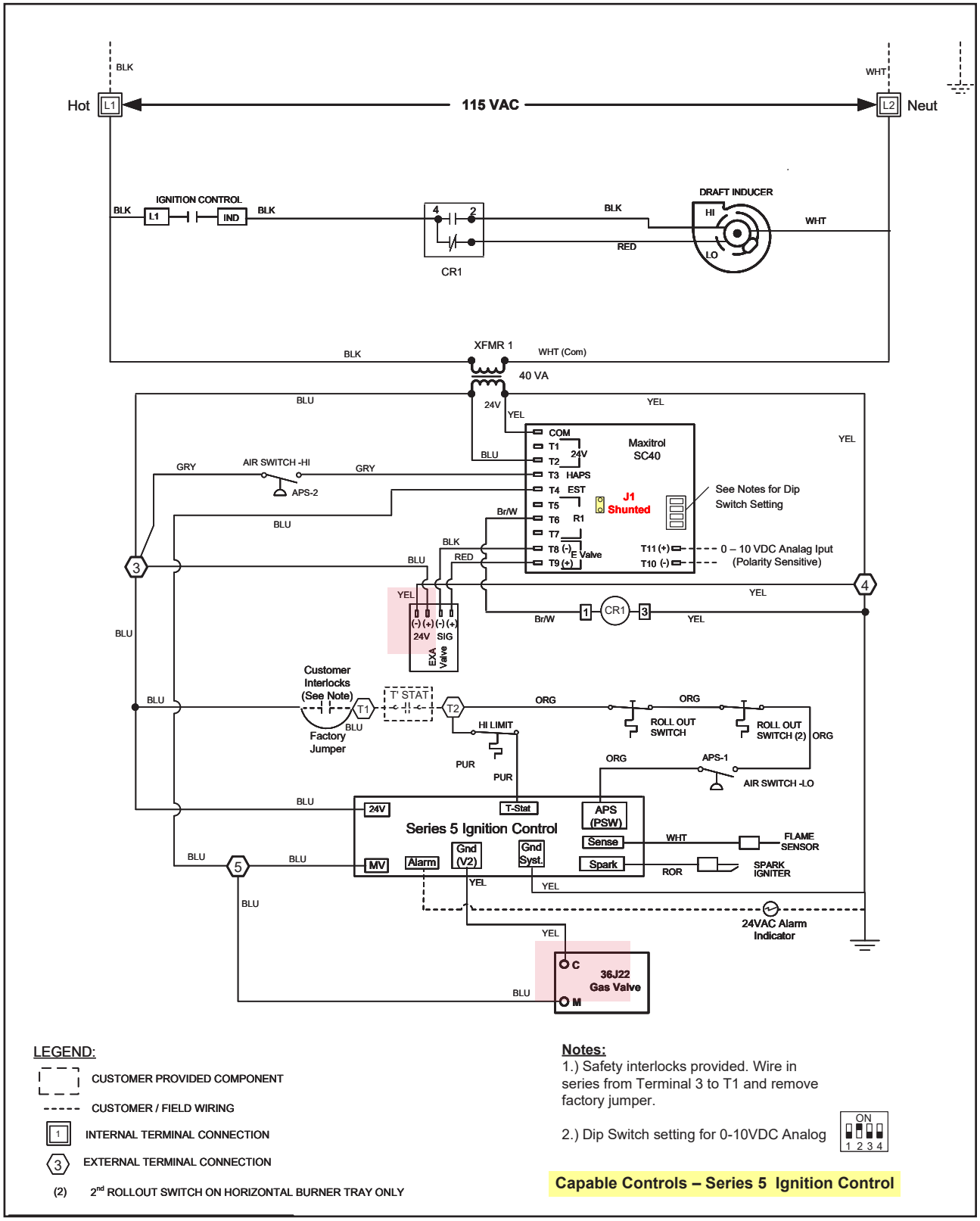

LEGEND:

- CUSTOMER PROVIDED COMPONENT
- CUSTOMER / FIELD WIRING
- INTERNAL TERMINAL CONNECTION
- EXTERNAL TERMINAL CONNECTION
- (2) 2nd ROLLOUT SWITCH ON HORIZONTAL BURNER TRAY ONLY

Notes:

1.) Safety interlocks provided. Wire in series from Terminal 3 to T1 and remove factory jumper.

2.) Dip Switch setting for 0-10VDC Analog

Capable Controls – Series 5 Ignition Control

FIGURE 6.9.2 CONTROL WIRING, 5:1 TURNDOWN FURNACE, 50–100 MBH

NOTE: Furnace-specific wiring schematics are provided with each unit and can be found in the document package shipped with the unit.

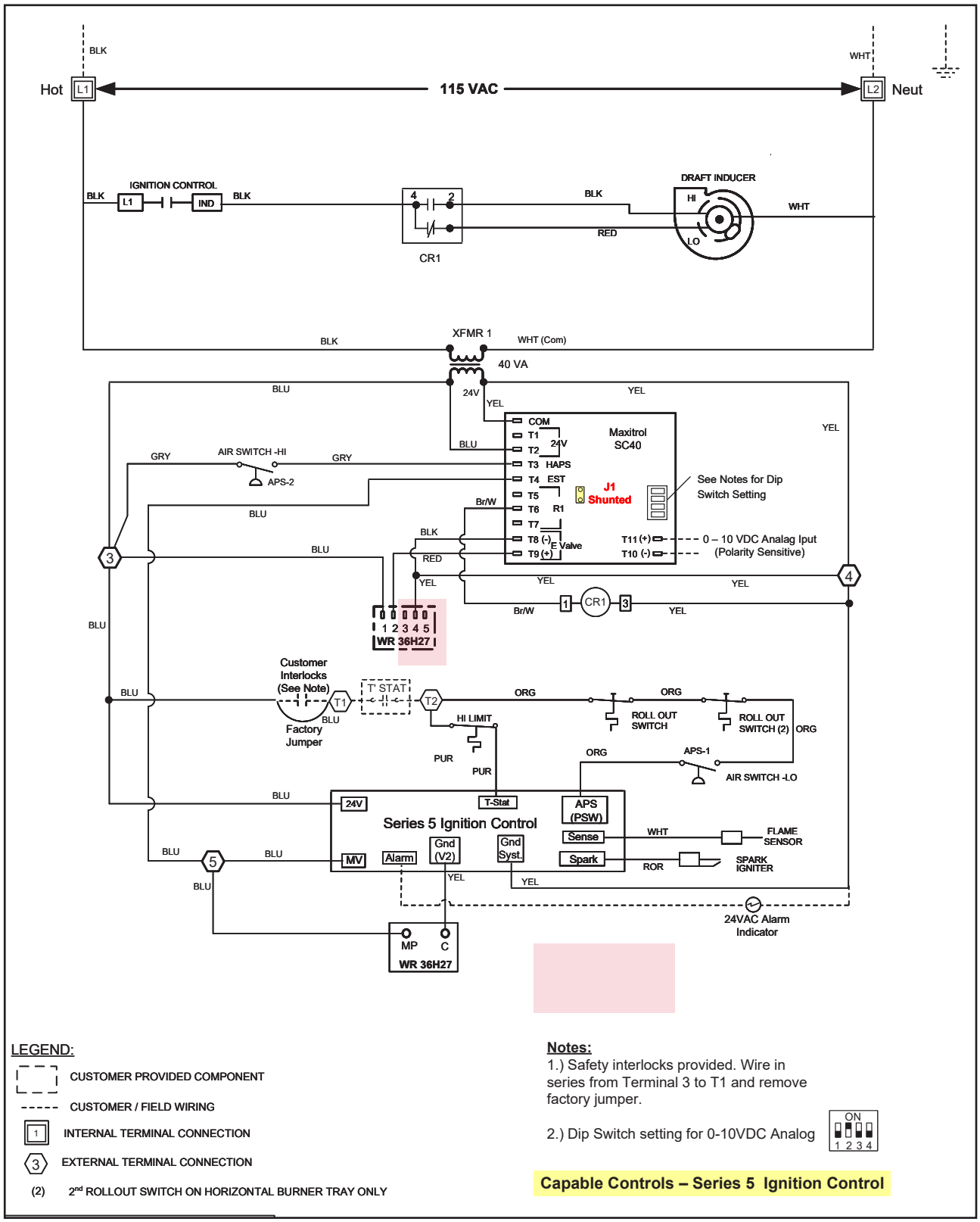

FIGURE 6.9.3 CONTROL WIRING, 5:1 TURNDOWN FURNACE, 125–175 MBH

NOTE: Furnace-specific wiring schematics are provided with each unit and can be found in the document package shipped with the unit.

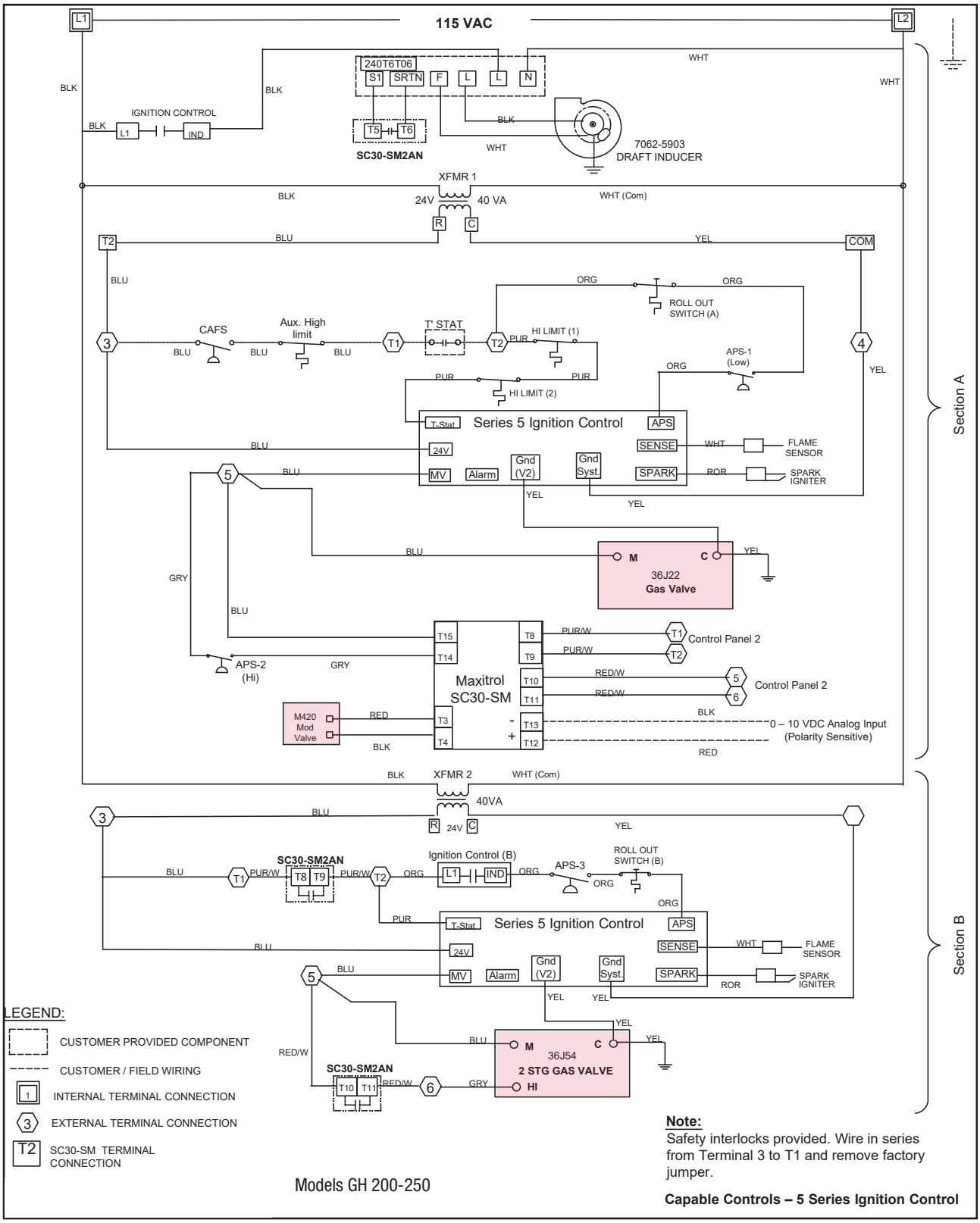

Models GH 200-250

FIGURE 6.9.4 CONTROL WIRING, 10:1 TURNDOWN FURNACE, 200–250 MBH

NOTE: Furnace-specific wiring schematics are provided with each unit and can be found in the document package shipped with the unit.

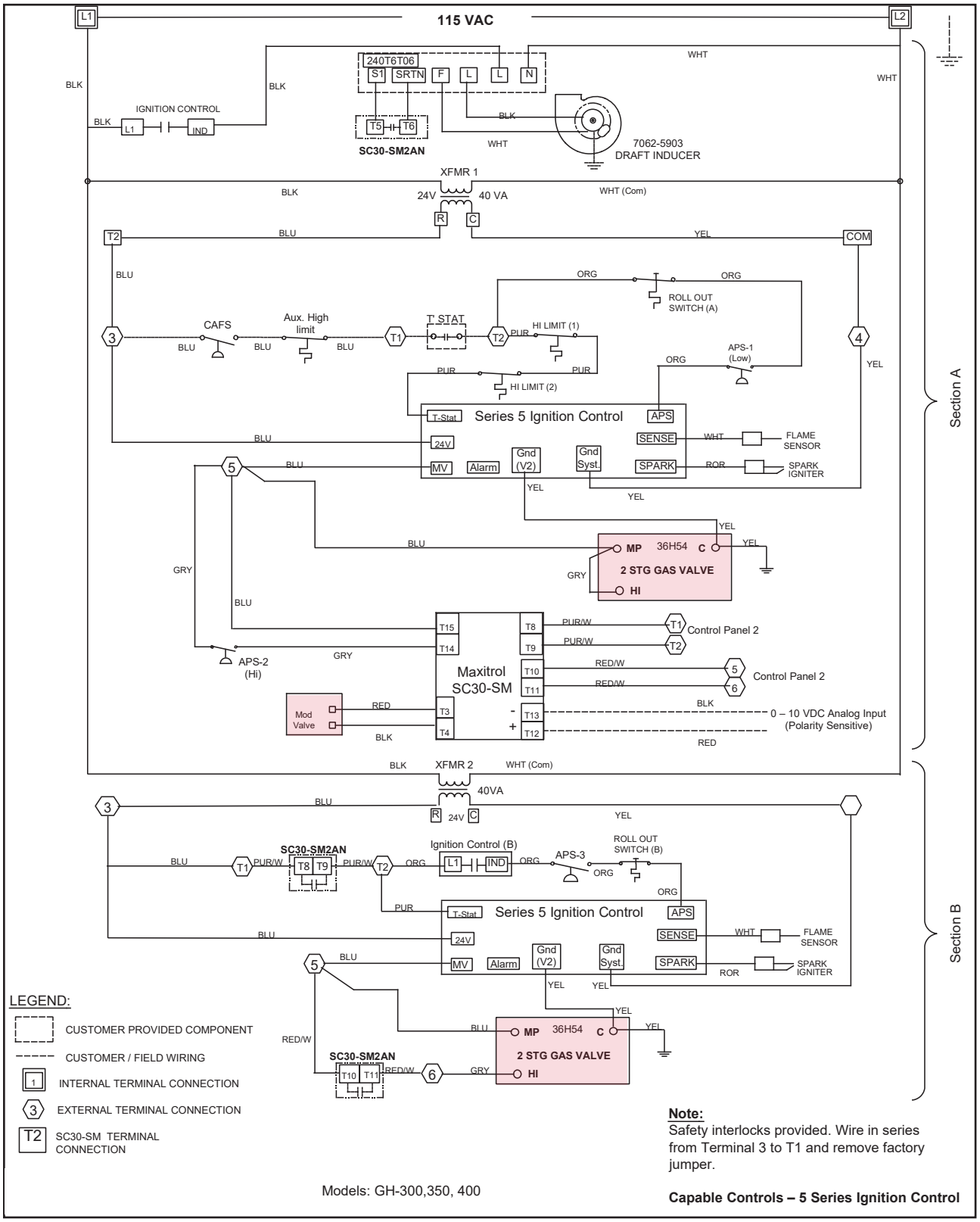

FIGURE 6.9.5 CONTROL WIRING, 10:1 TURNDOWN FURNACE, 300–400 MBH

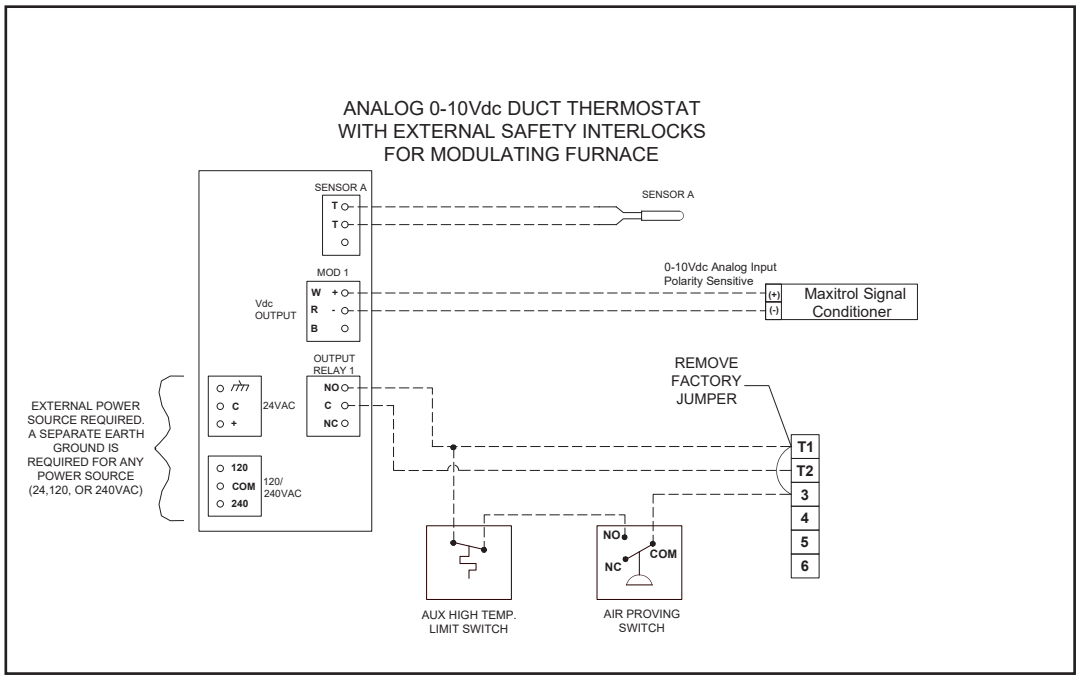

FIGURE 6.9.6 FURNACE CONTROL WIRING SCHEMATIC—ANALOG

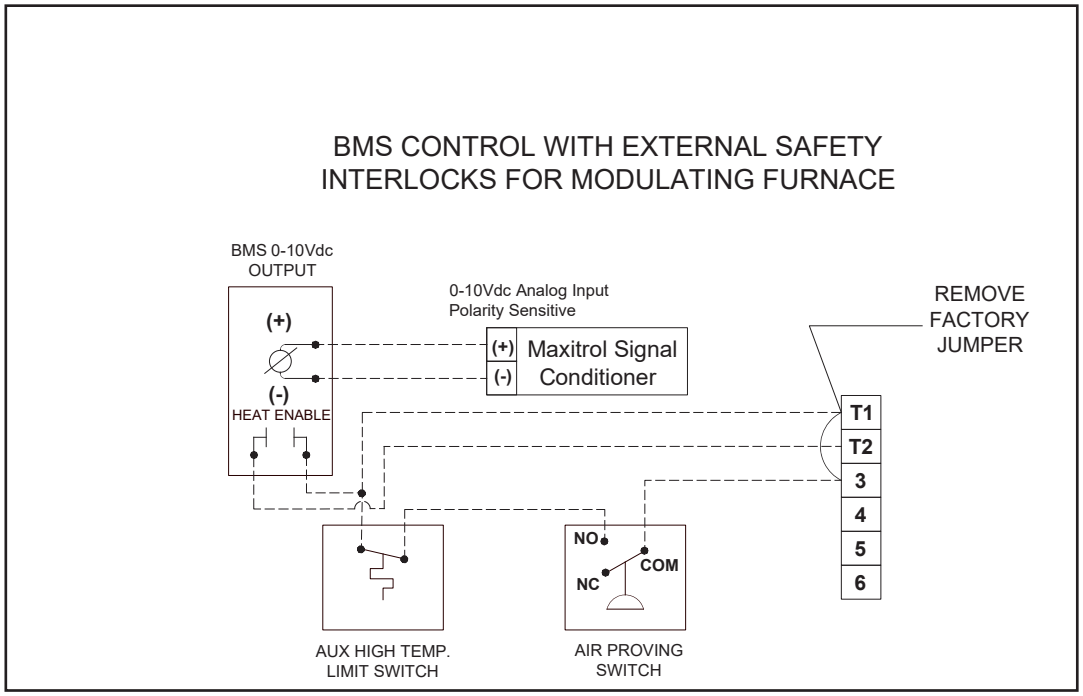

FIGURE 6.9.7 FURNACE CONTROL WIRING SCHEMATIC—BMS

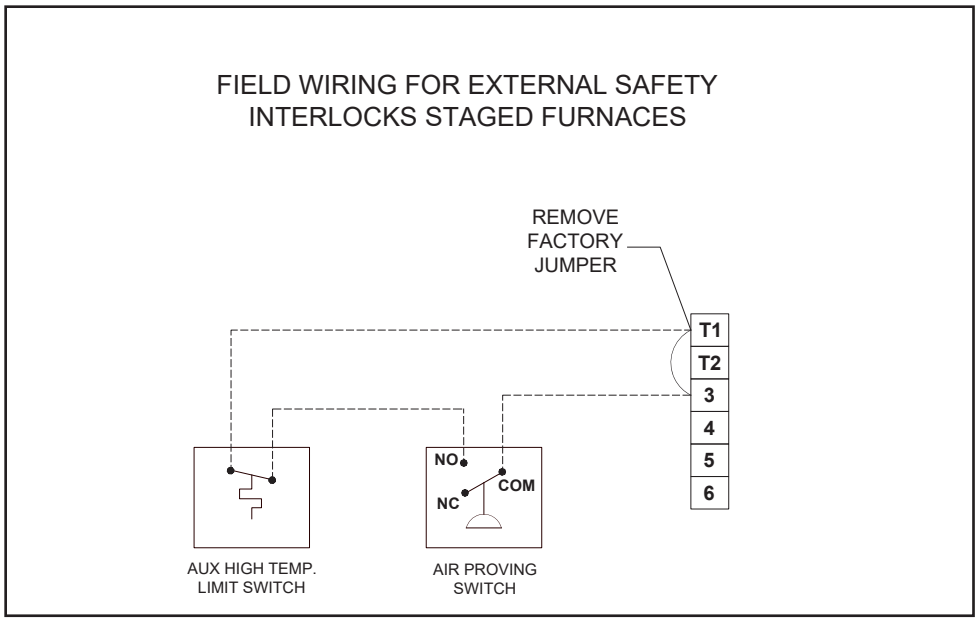

FIGURE 6.9.8 FURNACE CONTROL WIRING SCHEMATIC—EXTERNAL SAFETY INTERLOCKS

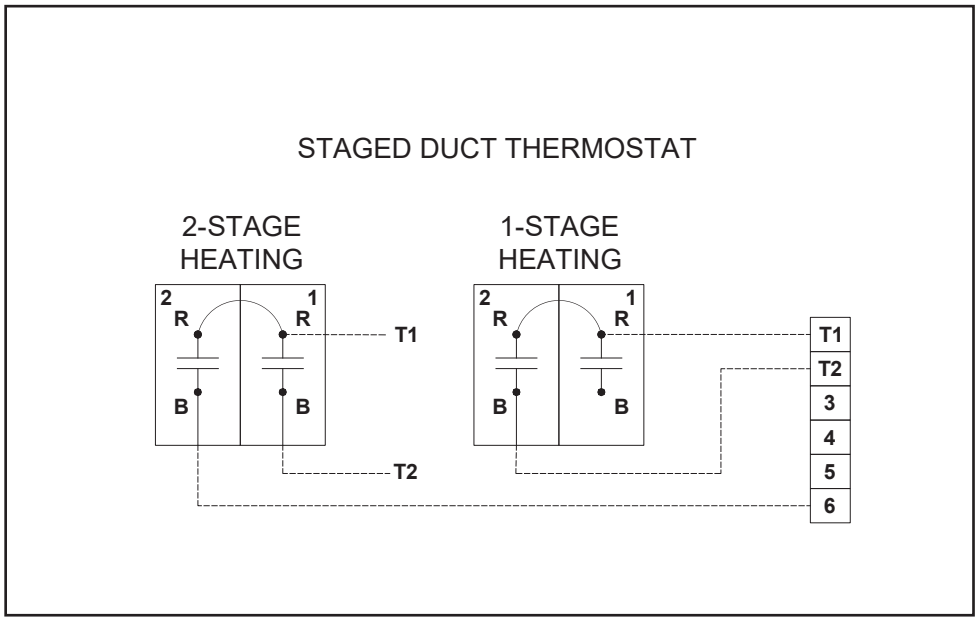

FIGURE 6.9.9 FURNACE CONTROL WIRING SCHEMATIC—STAGED DUCT THERMOSTAT

7.0 FURNACE INSTALLATION

7.1 FURNACE INSPECTION ON ARRIVAL

This furnace was test operated and inspected at the factory prior to shipment and was in satisfactory working order. A copy of the test and inspection sheet is included in the documentation package provided. Inspect the packaging on delivery for any signs of damage. Report any damage immediately to the transporting agency. After uncrating, inspect furnace for any concealed damage.

7.2 PREPARING FOR INSTALLATION

The type of gas for which the furnace is equipped, the input rating and electrical ratings are shown on the unit data plate, to be found inside the removable door. Before installation, be sure that the available gas and electrical supply match the data plate information.

Read this manual in its entirety before beginning installation. Check with local gas utility or agencies having jurisdiction to determine if there are local requirements covering installation of duct furnaces.

7.3 INSTALLATION CODES

The duct furnace covered in this manual is design certified by Intertek Testing Services/ETL for commercial or industrial use in the United States and Canada.

These units must be installed in accordance with local building codes, the National Fuel Gas Code (NFPA54/ANSI Z223.1 or in Canada, with the Canadian Natural Gas and Propane Installation Code (CSA B149.1)

7.4 PLACEMENT OF FURNACE

The indoor duct furnace is designed for installation indoors. The outdoor duct furnace is designed for installation outdoors on a roof or other outside location. Select a location that is central to the inside duct runs and close to the ERV or other air handler that might be part of the system. The duct furnace must be installed with horizontal airflow. The contractor is responsible for safe installation of the furnace.

⚠ CAUTION

It is the installer's responsibility to make sure the screws or bolts used for securing the furnace are properly selected for the loads and substrates involved. Secure the furnace so that it cannot fall or tip in the event of accident, structural failure or earthquake. RenewAire strongly recommends outdoor units are secured properly to the building structure.

Strong winds, tornados and hurricanes can and do displace or remove equipment from curbs and rails. When this happens, the equipment, adjacent roof structure and even the cars parked near the building can be damaged, and rain typically enters the building. The equipment is put out of service and the collateral damage can be very expensive.

Provide service access to the furnace to allow for cleaning and inspections.

IMPORTANT

Provide adequate service access for maintenance. The furnace requires regular inspections. Install the furnace where the access panels can be removed for cleaning and inspection and wiring can be accessed for installation and service. Observe all safety precautions when working on roofs, including locating the unit away from roof edges, provision of safety railings and use of fall-protection equipment.

There are U-channels at the base of the furnace for lifting the unit. Spreader bars are recommended to avoid damage to the unit. Do not allow lifting cables to contact the furnace sheet metal enclosure.

The U-channels can be used for floor-mounted installations. These channels provide the required minimum clearance to combustible floor surfaces. DO NOT remove the channels attached to the base of the cabinet.

7.5 CLEARANCE TO COMBUSTIBLES AND SERVICE CLEARANCES

Units must be located to provide the following clearances to combustible materials:

- Sides and back: 6 inches
- Bottom: 2 inches
- Top: 36 inches
- Front: 36 inches

7.6 FURNACE INSTALLATION REQUIREMENTS

The duct furnace must be installed on the positive pressure side of the ERV or field-supplied circulating air blower. The air throughput must be within the CFM range marked on the furnace rating plate.

Ductwork should be mechanically fastened to the furnace. Joints should be sealed with high temperature silicone caulking or high temperature tape to prevent leakage of circulating air. All outdoor furnace duct connections must be weathertight to prevent rain and snow from entering the ductwork. Support all ductwork securely. DO NOT rely solely on furnace duct connections for support. Provide removable access panels in ductwork immediately upstream and downstream of the duct furnace to allow for inspection of the heat exchanger. These openings should be large enough to observe smoke or reflected light inside the casing to inspect the heat exchanger for leaks and to check for hot spots on the heat exchanger due to poor air distribution or insufficient air volume. Attach covers so as to prevent air leakage. See Figure below.

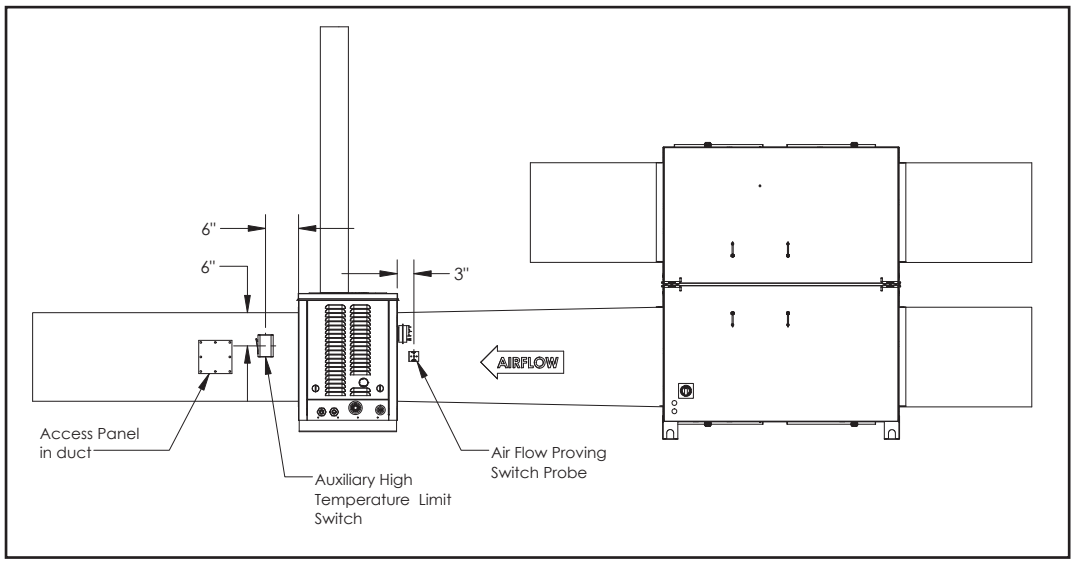

FIGURE 7.6.0 INSTALLATION EXAMPLE

7.7 INSTALL CONTROL SENSORS

All required control sensors are shipped loose with the unit. Each control device has a separate installation instruction sheet that is included in the documentation package.

Each furnace comes equipped with an air proving switch and airflow probe that are to be field-installed. The air proving switch requires some static pressure, approximately 0.2 InWC in the duct to prove air flow. Install the proving switch probe 3 inches upstream of the furnace, in the side of the duct. Mount the air proving pressure switch vertically on a non-vibrating surface within a short distance from the probe. Connect the tubing from the probe to the proving switch. Wire the air proving switch as shown in the wiring schematics.

FIGURE 7.7.0 AIR PROVING SWITCH

FIGURE 7.7.1 AIRFLOW PROBE

Each furnace comes equipped with an auxiliary high temperature limit switch that is to be field-installed. Install the auxiliary high temperature limit switch 6 inches downstream of the furnace in the side of the duct. Wire the auxiliary high temperature limit switch as shown in the wiring schematics.

FIGURE 7.7.2 AUXILIARY HIGH TEMPERATURE LIMIT SWITCH

7.8 INSTALL GAS SUPPLY PIPING

7.8.1 Installation of Gas Piping

⚠ WARNING

All components of this or any other gas-fired heating unit must be leak-tested prior to placing the unit into operation. A soap and water solution or other non-corrosive leak detection fluid should be used to perform this test. NEVER test for gas leaks with an open flame.

⚠ WARNING

When leak testing at pressures equal to or less than 14 inches WC [3.5 kPa], first close the field-installed shutoff valve to isolate the unit from the gas supply.

IMPORTANT

All gas piping must be installed in accordance with the latest edition of the National Fuel Gas Code, ANSI Z223.1 and any local codes that may apply. In Canada, the equipment shall be installed in accordance with the Installation Code for Gas Burning Appliances and Equipment, (CGAB 149) and Provincial Regulations for the class. Authorities having jurisdiction should be consulted before installations are made.

IMPORTANT

All piping should be clean and free of any foreign material. Foreign material entering the gas train can cause damage.

IMPORTANT

DO NOT connect the furnace to gas types other than what is specified and DO NOT connect the unit to gas pressures that are outside the pressure range shown on the unit label.

IMPORTANT

Before applying gas to the valves, test the gas pressure to make sure it is less than 13.5 InWC. Pressures greater than 13.5 inches WC will damage the gas valves.

NOTE

When connecting the gas supply, the length of the run must be considered in determining the pipe size to avoid excessive pressure drop. Refer to a Gas Engineer's handbook for gas pipe capacities.

NOTE

Each furnace has a single 3/4 inch gas connection.

7.8.2 Determin Gas Supply Requirements

The data sticker located inside the removable door on the furnace lists the requirements for the gas being supplied to the unit.

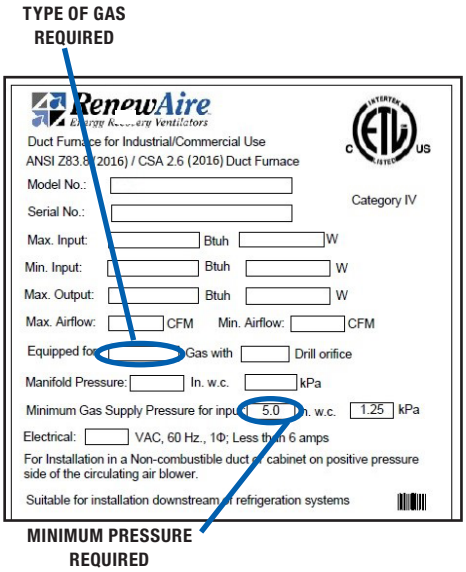

FIGURE 7.8.0 TYPICAL DATA LABEL

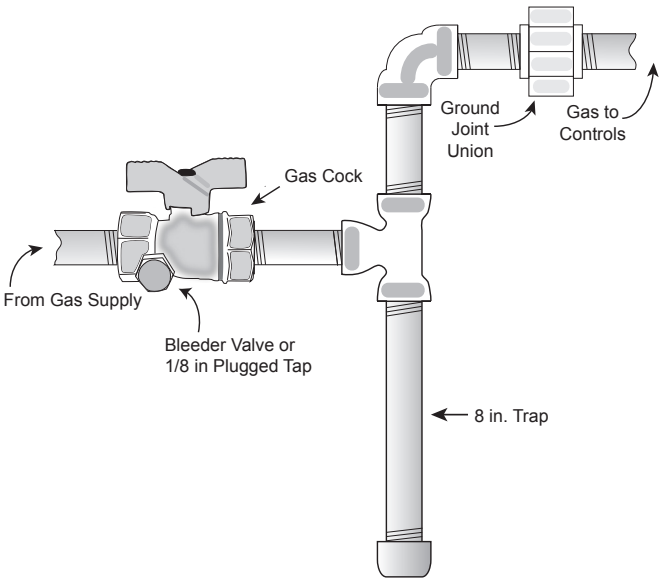

FIGURE 7.8.1 TYPICAL GAS SUPPLY PIPING CONNECTION

A manual shut-off valve (gas cock), a 1/8 inch plugged test port or bleeder valve and a drip leg must be field-installed between the gas supply pipe and the start of the gas train. The valve and test port must be accessible for the connection of a test gauge. Supply gas connections must be made by a qualified installer and are to be provided by others.

Connect gas supply piping to the 3/4" MPT gas fitting on the front of the furnace. Follow all local codes, or, in the absence of any local codes, comply with ANSI Z223.1.

7.9 CONNECT CONDENSATE DRAIN

Each ducted gas furnace is equipped with a 3/8 inch diameter stainless steel condensate drain tube that extends from the front of the furnace. The condensate drain tube is under negative pressure and must be trapped. The trap is to be provided by others and field-installed. The trap should be fabricated in accordance with local building codes. It should allow for easy cleaning and easy addition of a glycol solution, if needed for winterization. In addition, attention should be given to the possible need for heat tapes. If heat tapes are to be used, it may be necessary to fabricate the trap and other drain piping from metal.

The drain trap should be filled with water or glycol solution prior to furnace start-up.

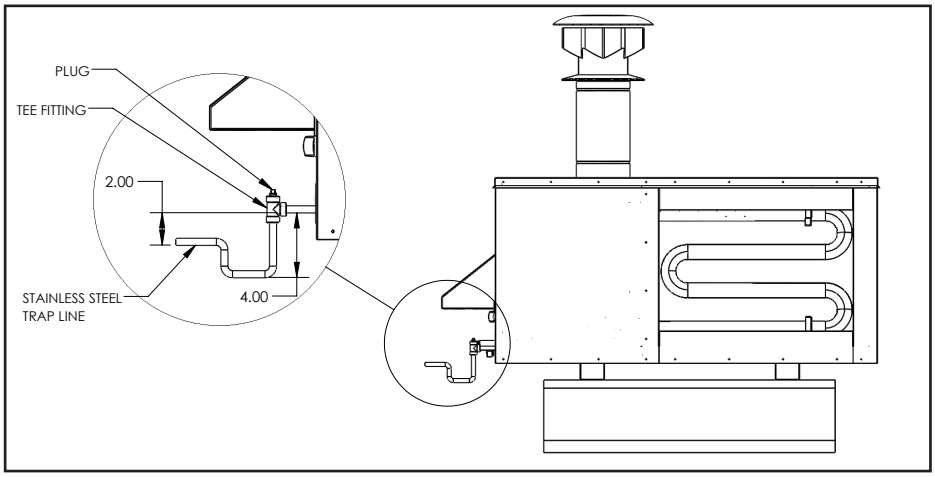

FIGURE 7.9.0 RECOMMENDED DRAIN TRAP CONSTRUCTION

7.10 MAKE ELECTRICAL CONNECTIONS

Both high voltage supply and low voltage control wiring should be installed and connected at this time. High voltage wiring and low voltage wiring should be run in separate conduits. Use the factory-supplied electric fittings on the front of the furnace cabinet for entry into the furnace. See Figure below.

FIGURE 7.10.0 ELECTRIC SUPPLY FITTINGS (TYPICAL)

8.0 OPERATING INSTRUCTIONS

A wiring diagram and a Sequence of Operation are provided in the unit information package for each specific control system provided on the duct furnace. Refer to the documents before attempting to place the unit in service.

- This duct furnace does not have a pilot light. It is equipped with a direct spark ignition device that automatically lights the gas burner. DO NOT try to light burners by hand.
- BEFORE OPERATING, leak test all gas piping up to the heater valve. Smell around the unit area for gas. DO NOT attempt to place the unit in operation until source of gas leak is identified and corrected.
- Use only hand force to push and turn the gas control knob to the "ON" position. NEVER use tools. If knob does not operate by hand, replace gas valve prior to starting the unit. Forcing or attempting to repair the gas valve may result in fire or explosion.
- Do not attempt to operate the furnace if there is indication that any part or control has been under water. Any control or component that has been under water must be replaced prior to trying to start the furnace.

NOTE: Start-Up is defined as the process of activating each system within a newly-installed furnace after it has been properly installed in the system in which it is expected to operate. A full and proper start-up cannot be performed unless the Occupied Space with all its associated ductwork, controls and design options are completed, intact, and ready for full-load testing.

8.1 START-UP

- Turn thermostat or temperature controller to its lowest setting.
- Turn off gas supply at the manual shut-off valve.
- Turn off power to the furnace at the disconnect switch.
- Remove access panel to furnace.
- Move gas control knob to "OFF" position.
- Install a tapped fitting for attachment to a manometer or other gauge suitable for 14 InWC in the inlet pressure tap, and for 10 InWC in the manifold pressure tap.
- Wait five minutes for any gas to clear out. If you smell gas, see above and correct leak. If you don't smell gas or have corrected any leaks, go to the next step.
- Turn gas control knob to "ON" position. Open all manual gas valves.
- Turn power "ON" at disconnect switch.
- Set thermostat or controller to its highest position to initiate call for heat and maintain operation of unit.*
- Draft inducer fan will run for a 15 to 30 second pre-purge period. (See Sequence of Operations provided.)
- At the end of the pre-purge, the direct spark will be energized and gas valve will open.
- Burners ignite.

* NOTE: If modulating controls are provided on the duct furnace, refer to separate set-up sheet

8.2 INLET GAS PRESSURE

Verify inlet (line) pressure to the combination valve provided. A 1/8 inch NPT tapping is provided on the gas valve for measuring inlet pressure as shown.

8.3 INPUT

The correct heat capacity of the furnace is controlled by the burner orifices and the gas manifold pressure. The manifold pressure is factory-set but should be checked at time of start-up.

8.4 MANIFOLD PRESSURE ADJUSTMENT

A pressure tap is provided in each furnace manifold for measuring the gas manifold pressure. Manifold pressure must be checked at start-up and during any service or maintenance. All control systems operate at a manifold pressure of 3.40 to 3.50 InWC at maximum input on natural gas, and 10 InWC on propane gas.

8.5 FAILURE TO IGNITE

On the initial start-up, or after the unit has been off for long periods of time, the first ignition trial may be unsuccessful due to need to purge air from the manifold at start-up.

If ignition does not occur on the first trial, the gas and spark are shut off by the ignition control and the control then enters an inter-purge period of 15 to 90 seconds, during which time the draft inducer continues to run. At the end of the inter-purge period, another trial for ignition will be initiated.

Control will initiate up to three ignition trials on a call for heat before lockout of control occurs. Control can be brought out of lockout by turning thermostat or controller to its lowest position and waiting 5 seconds and then turning it back up to call for heat. Some controls provided will automatically reset after one hour and initiate a call for heat.

8.6 UNIT START-UP ADJUSTMENTS

8.6.1 Burner Flames

Prior to completing the start-up, check the appearance of the main burner flame. See images below for characteristics of properly adjusted Natural Gas systems.

The burner flame should be predominantly blue in color and well defined and centered at the tube entry. Distorted flame or yellow tipping of natural gas flame, or a long yellow flame on propane, may be caused by lint and dirt accumulations inside burner or at burner ports, at air inlet between burner and manifold pipe, or debris in the main burner orifice. Soft brush or vacuum clean affected areas.

Poorly defined, substantially yellow flames, or flames that appear lazy, indicate poor air supply to burners or excessive burner input. Verify gas supply type and manifold pressure with rating plate information.

Poor air supply can be caused by obstructions or blockage in heat exchanger tubes or vent discharge pipe. Inspect and clean as necessary to eliminate blockage. Vacuum any loose dirt or loose debris. Clean heat exchanger tubes with a stiff brush. Poor flame characteristics can also be caused by undersized combustion air openings or flue gas recirculation into combustion air supply. Increase air opening size or re-direct flue products to prevent recirculation.

Reduced air delivery can also be the result of fan blade slippage, dirt accumulation on the fan blade or low voltage to draft inducer motor. Inspect draft fan assembly and be sure the fan blade is secure to motor shaft. Check the line voltage to the furnace.

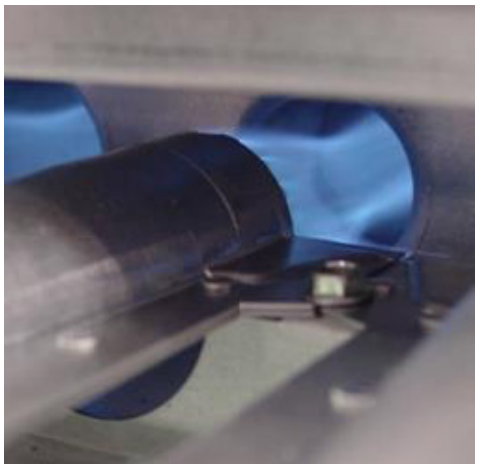

FIGURE 8.6.0 BURNER FLAME AT 1.2 INWC [298 PA] MANIFOLD (PRESSURE DRAFT INDUCER AT HIGH SPEED)

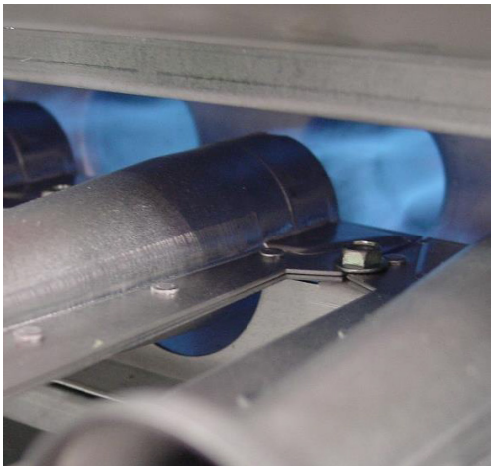

FIGURE 8.6.1 BURNER FLAME AT HIGH FIRE 3.5 INWC [871 PA] MANIFOLD (PRESSURE DRAFT INDUCER AT HIGH SPEED)

NOTE: Information outlining the normal sequence of operation and a wiring diagram for the control system supplied with each furnace are provided in this manual and with the information package shipped with the unit.

8.6.2 Shutdown After Unit Start-Up

- Set thermostat or controller to lowest setting.
- Turn off electrical supply to unit at disconnect switch.
- Turn off gas supply at the manual shut-off valve.
- Disconnect manifold and inlet pressure taps and re-install pipe plugs.
- Replace vestibule access door.

8.6.3 Normal Operation

- Turn on electrical supply to furnace at disconnect switch.
- Turn on gas supply at the manual shut-off valve.
- Set thermostat or controller to desired temperature.

9.0 MAINTENANCE

NOTE: It may be necessary to use a "borescope" to properly inspect the heat exchanger tubes.

Annual maintenance: This duct furnace should be inspected and serviced annually by a qualified service agency to assure proper operation. Annual servicing of the furnace is normally performed at the beginning of the heating season.

9.1 FURNACE MODULE INSPECTION

Turn off all electrical power to the unit before inspection and servicing.

- Visually inspect the condition of the heat exchanger tubes. Look for cracks, heat damage or other deterioration in the tubes. Any heat exchanger tubes showing failure must be replaced before the unit is placed back in service.
- The burner assembly should be disassembled for inspection and cleaning.
- Burners, igniters and flame sensors should be removed and cleaned. Check for obvious signs of corrosion, accumulation of dirt and debris and any heat or water related damage. Any damaged or deteriorated parts should be replaced before the unit is placed back in service.
- Clean the draft inducer and vent ducts. Fan blades on the draft inducer should be cleaned.
- Check electrical wiring for loose connections or deteriorated insulation.
- Check the attachment point of the furnace module to the cabinet or ducts to verify they are air tight.
- Check for gas tightness of all pipe joints and connections.
- Check the automatic gas valve to ensure that the gas valve seat is not leaking.
- If there is a condensate drain tube, make sure the drain line is not obstructed. Verify that the drain tube is properly trapped and, if necessary, properly freeze-protected. Clean any debris or blockage from the drain line.

9.2 FURNACE MODULE OPERATION CHECK

- Turn on power to the unit and set thermostat or heat controller to call for heat, allowing furnace module to operate.
- Check for proper start-up and ignition as outlined in Sequence of Operations (SOO) for the control provided. The SOO is printed on a separate page and is to be found with the furnace documentation package.
- Check the appearance of the burner flame. Reference information in the Installation section of this manual.
- Verify that the heat rise is correct. For staged ignition furnaces, check heat rise for each stage. For modulated furnaces, check heat rise at high fire.
- Return thermostat or heat controller to normal setting.

⚠ CAUTION

If any of the original wiring needs to be replaced, it must be replaced with wiring materials suitable for 105˚C.

Label all wires prior to disconnection when servicing the unit. Wiring errors can cause improper or dangerous operation. Verify proper operation after servicing.

9.3 SERVICE PARTS

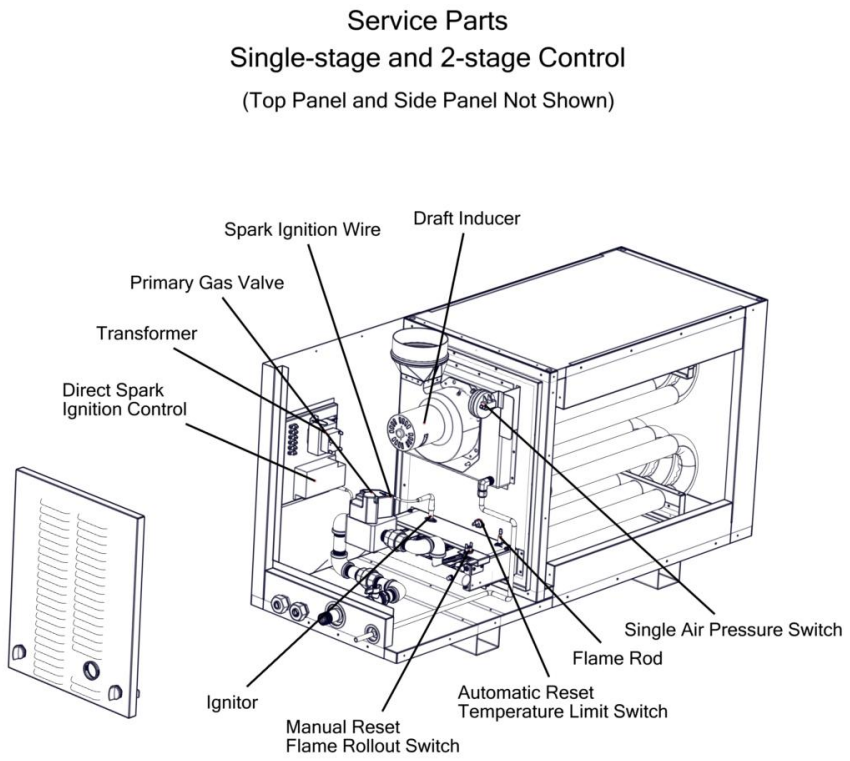

FIGURE 9.3.0 SERVICE PARTS—STAGED CONTROL

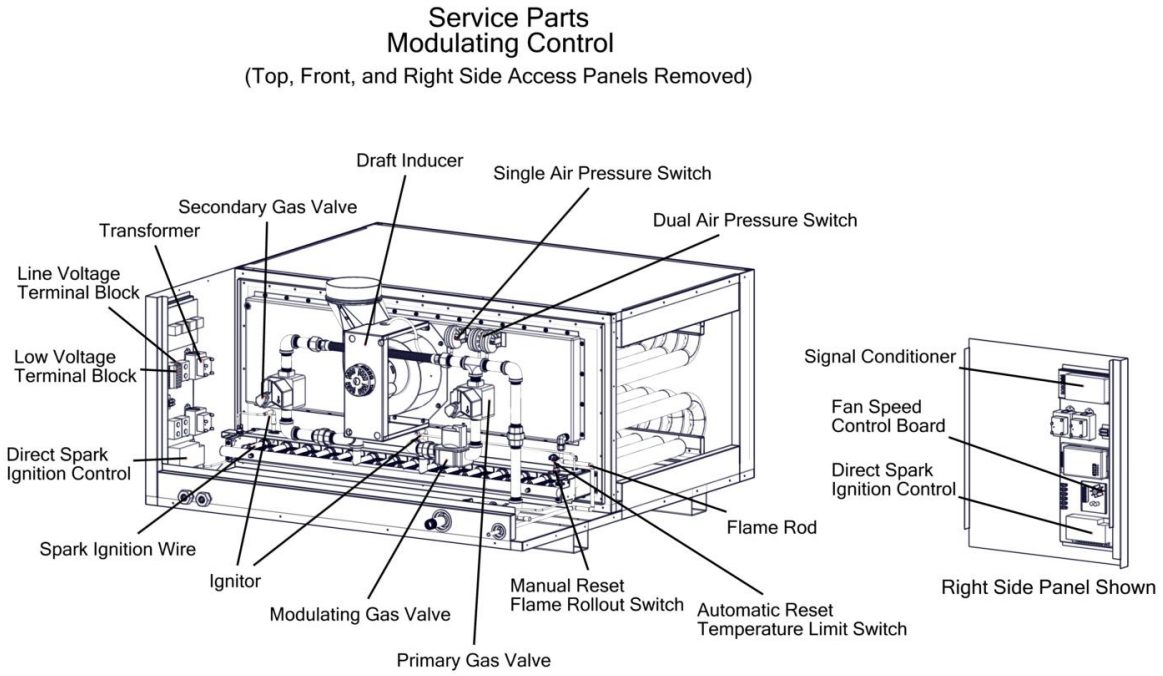

FIGURE 9.3.1 SERVICE PARTS—MODULATED CONTROL

10.0 TROUBLESHOOTING

Any failure of the duct heater to operate properly can be isolated by:

- Verify that conditions shown in the start-up portion of this manual are correct
- Follow the Sequence of Operation (SOO) to determine the point of failure.

The most important resource for trouble shooting is the Sequence of Operation. The sequence varies for each unit, depending on the furnace size, the turndown ratio and the controls. In some cases, duct furnaces are controlled by a building management system (BMS) and the issue may be with the BMS, not with the furnace.

10.1 SEQUENCE OF OPERATIONS (SOO)

Each duct furnace has a specific Sequence of Operation. The SOO is printed separately and shipped with the furnace documentation package. As an aid to understanding the operation of the duct furnace, following is a GENERIC sequence of operation.

1. Thermostat (or heat enable) closes and provides a call for heat, powering T2 or T1 and T2.
2. 24VAC is applied to IC terminal T'STAT, provided that the high limit switch is in the closed position.
3. The furnace control will check that pressure switch contacts are open.
4. The induced draft fan is energized at high speed.
5. When the air switch (APS-1) closes, a 15 second pre-purge period begins.
6. At the end of pre-purge, the spark commences.
7. Burners ignite and cross-light.
8. When flame is detected by the flame sensor, the spark is shut off immediately while the gas valve(s) and combustion blower remain energized.
9. During heating operation, the thermostat, pressure switch and main burner flame are constantly monitored to assure proper system operation.
10. When the thermostat (controller) is satisfied and the demand for heat ends, the gas valve(s) is de-energized immediately. The control senses loss of flame and a 30 second post-purge occurs before the fan is de-energized.

Note that the furnace-specific SOO will also provide information regarding ignition and operational failures, recovery from lockout and a complete set of LED Normal Operation codes and a set of Error Codes. The SOO provides details that are specific to the controls and turn-down of the specific furnace.

10.2 IGNITION CONTROLLER

Problems with ignition can often be diagnosed by viewing the LED indicator on the Series 5 Ignition Controller that is used on all models. The controller monitors operation of the furnace and will shut down the furnace for a number of reasons and provide a flashing error code. It also indicates the stages of ignition and correct operation.

ERROR CODE:

Solid Green = Normal operation

1 Red Flash = No Flame During Trial

2 Red Flashes = Flame Sense Fail

3 Red Flashes = Pilot Main Relay Fail

4 Red Flashes = Multiple Flame Loss

5 Red Flashes = Rollout Error

6 Red Flashes = APS Airflow Error

7 Red Flashes = Internal Control Error

Solid Red = Line Voltage Error

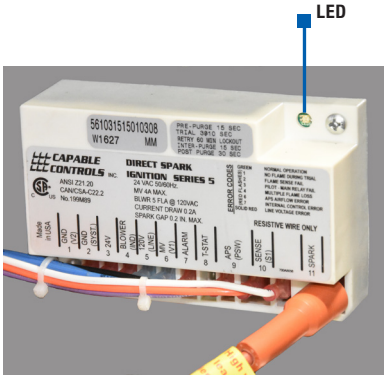

11.0 FACTORY ASSISTANCE

In the unlikely event that you need assistance from the factory for a specific issue with the Indirect Gas-Fired Furnace, make sure that you have the information called for in the Unit Records page in the Owner Information section of this manual. The person you speak with at the factory will need that information to properly identify the unit and the installed options.

To contact RenewAire Customer Service:

Call: 800-627-4499

Email: RenewAireSupport@RenewAire.com

Remember that RenewAire Customer Service can only assist with the products sold by RenewAire and their options, it cannot resolve engineering issues that result from air handling system design by others.

12.0 WARRANTY

The RenewAire Indirect Gas-Fired Duct Furnace is covered under the standard RenewAire ERV warranty. A copy of the warranty is included with the unit manuals. If the warranty should be lost or misplaced, a PDF version can be downloaded from:

http://www.renewaire.com/support/for-the-professional/documentation/warranty-information

In addition to the standard RenewAire warranty, certain components in the furnace that are constructed of stainless steel (such as the heat exchanger tubes) have an extended prorated warranty. RenewAire's maximum liability on this limited warranty shall decrease as set forth below. The Customer shall be required to pay a percentage of the current replacement price in accordance with the following schedule at the time such failure in materials or workmanship occurs:

WARRANTY YEAR	CUSTOMER PAY PERCENTAGE
Year 1	0% of List Price
Year 2	10% of List Price
Year 3	20% of List Price
Year 4	30% of List Price
Year 5	40% of List Price
Year 6	50% of List Price
Year 7	60% of List Price
Year 8	70% of List Price
Year 9	80% of List Price
Year 10	90% of List Price

About RenewAire

For over 40 years, **RenewAire has been a pioneer in enhancing indoor air quality (IAQ)** in commercial and residential buildings of every size.This is achieved while maximizing sustainability through our fifth-generation, static-plate, enthalpic-core **Energy Recovery Ventilators (ERVs) that optimize energy efficiency**, lower capital costs via load reduction and decrease operational expenses by minimizing equipment needs, resulting in significant energy savings. Our ERVs are competitively priced, simple to install, easy to use and maintain and have a quick payback. They also enjoy the industry's best warranty with the lowest claims due to long-term reliability derived from innovative design practices, expert workmanship and **Quick Response Manufacturing (QRM)**.

As the pioneer of static-plate core technology in North America, RenewAire is the largest ERV producer in the USA. We're **committed to sustainable manufacturing** and lessening our environmental footprint, and to that end our Waunakee, WI plant is 100% powered by wind turbines. The facility is also one of the few buildings worldwide to be LEED and Green Globes certified, as well as having achieved ENERGY STAR Building status. In 2010, RenewAire joined the Soler & Palau (S&P) Ventilation Group in order to provide direct access to the latest in energy-efficient air-moving technologies. For more information, visit: renewaire.com

201 Raemisch Road | Waunakee, WI | 53597 | 800.627.4499 | RenewAire.com

138284_007_NOV23