# HE 3XINV

## ENERGY RECOVERY VENTILATOR

c UL us LISTED DUCTED HEAT RECOVERY VENTILATOR 89S5

## INDOOR UNIT

Energy recovery core is AHRI Certified®

AHRI CERTIFIED® www.ahridirectory.org
Air-to-Air ERV
AHRI Standard 1060
Energy Recovery COMPONENT is certified. Actual performance in packaged equipment may vary.

## SPECIFICATIONS

**Ventilation Type:**
Static plate, heat and humidity transfer

**Airflow Range:** 750–3,300 CFM

**AHRI 1060 Certified Core:** Three L125-G5

**Standard Features:**
TEFC Premium efficiency motors
Motor starters
Non-fused disconnect
24VAC transformer/relay package
Cross-core differential pressure ports

**Filters:**
Total qty. 6, MERV 8: 20" x 20" x 2"

**Unit Weight:**
590–999 lbs., varies by option(s)

**Max. Shipping Dimensions & Weight (on pallet):**
60" L x 90" W x 70" H
1,094 lbs.

**Motor(s):**
Qty. 2, Belt drive blower/standard motor packages with adjustable sheaves (see table below)

**Options:**
Onboard variable frequency drives (VFDs): both airstreams
Shaft grounding ring on motors with VFDs
Fused disconnect
Integrated programmable controls: enhanced, premium
Bypass economizer damper (see DIM drawing): dry-bulb temperature controls (standard), enthalpy controls (option)
Class 1 low leakage motorized isolation dampers: OA, RA or both airstreams
Factory mounted filter alarms: both airstreams
Double wall construction
Exterior paint: white, custom colors

**Accessories:**
Filters: MERV 13, 2" (shipped loose)
Automatic balancing damper: 4", 5", 6"
Digital time clock: wall mount (TC7D-W), in exterior enclosure (TC7D-E)
Carbon dioxide sensor/control: wall mount (CO2-W), duct mount (CO2-D)
IAQ sensor: wall mount (IAQ-W), duct mount (IAQ-D)
Motion occupancy sensor/control: ceiling mount (MC-C), wall mount (MC-W)
Smoke detector: duct mount (SD-D)
BACnet fan control: wall mount (BACNETFC-W)
Indoor electric duct heater: EK series (1–175 kW)
Indirect gas-fired duct furnace: GH series (50–400 MBH); Installed downstream of any fans

## AIRFLOW PERFORMANCE

| Motor HP | Blower RPM | Sheave Adj. Turns Open | External Static Pressure (Inches Water Column) | | | | | | | | | | | | | |
|---|---|---|---|---|---|---|---|---|---|---|---|---|---|---|---|---|
| | | | 0.00 | | 0.25 | | 0.50 | | 0.75 | | 1.00 | | 1.25 | | 1.50 | |
| | | | SCFM | BHP | SCFM | BHP | SCFM | BHP | SCFM | BHP | SCFM | BHP | SCFM | BHP | SCFM | BHP |
| 2.0 | 1195 | 4 | 2185 | 0.8 | 2000 | 0.7 | 1725 | 0.5 | 1210 | 0.4 | | | | | | |
| | 1355 | 2 | 2440 | 1.1 | 2270 | 0.9 | 2060 | 0.8 | 1715 | 0.6 | 1210 | 0.5 | | | | |
| | 1476 | 0 | 2700 | 1.5 | 2550 | 1.3 | 2380 | 1.2 | 2150 | 1.0 | 1750 | 0.8 | 1300 | 0.6 | | |
| 3.0 | 1536 | 2.5 | 2810 | 2.1 | 2700 | 2.1 | 2560 | 1.9 | 2370 | 1.8 | 2140 | 1.6 | 1840 | 1.5 | 1420 | 1.1 |
| | 1632 | 1.5 | 2985 | 2.5 | 2880 | 2.4 | 2760 | 2.3 | 2590 | 2.2 | 2400 | 2.0 | 2145 | 1.8 | 1855 | 1.6 |
| | 1696 | 0.5 | 3100 | 2.8 | 3000 | 2.7 | 2900 | 2.7 | 2735 | 2.5 | 2505 | 2.3 | 2335 | 2.1 | 2065 | 1.9 |
| | 1728 | 0 | 3160 | 3.0 | 3055 | 2.9 | 2960 | 2.8 | 2800 | 2.6 | 2635 | 2.5 | 2425 | 2.3 | 2165 | 2.1 |
| 5.0 | 1749 | 2 | 3300 | 3.3 | 3200 | 3.1 | 3020 | 2.8 | 2860 | 2.6 | 2660 | 2.3 | 2440 | 2.1 | 2200 | 1.8 |
| | 1801 | 1 | | | 3300 | 3.4 | 3140 | 3.1 | 2980 | 2.8 | 2800 | 2.6 | 2585 | 2.8 | 2350 | 2.1 |
| | 1853 | 0 | | | | | 3245 | 3.4 | 3090 | 3.1 | 2920 | 2.9 | 2715 | 2.6 | 2500 | 2.4 |

**Operation in this zone outside of core airflow limits.**

**Note:** Brake horsepower (BHP) is for one blower motor package only. Airflow performance includes effect of clean, standard filter supplied with unit.

## ELECTRICAL DATA

| Standard Electrical Specifications | | | | | | | Optional Factory Installed VFD Electrical Specifications | | |
|---|---|---|---|---|---|---|---|---|---|
| HP | Volts | Hz | Phase | FLA per motor | Min. Cir. Amps | Max. Overcurrent Protection Device | FLA per motor | Min. Cir. Amps | Max. Overcurrent Protection Device |
| 2.0 | 120 | 60 | Single | 20.0 | 45.0 | 60.0 | | | |
| 2.0 | 208–230 | 60 | Single | 10.8–10.0 | 24.3 | 35.0 | 6.6–5.8 | 28.3 | 30.0 |
| | 208–230 | 60 | Three | 6.6–5.8 | 14.9 | 20.0 | 6.6–5.8 | 16.3 | 20.0 |
| | 460 | 60 | Three | 2.9 | 6.5 | 15.0 | 2.9 | 7.2 | 15.0 |
| | 575 | 60 | Three | 2.4 | 5.4 | 15.0 | 2.4 | 5.9 | 15.0 |
| 3.0 | 208–230 | 60 | Single | 14.7–14 | 33.1 | 40.0 | 9.4–8.5 | 40.2 | 45.0 |
| | 208–230 | 60 | Three | 9.4–8.5 | 21.1 | 25.0 | 9.4–8.5 | 23.2 | 25.0 |
| | 460 | 60 | Three | 4.24 | 9.5 | 15.0 | 4.24 | 10.5 | 15.0 |
| | 575 | 60 | Three | 3.3 | 7.4 | 15.0 | 3.3 | 8.2 | 15.0 |
| 5.0 | 208–230 | 60 | Three | 14.5–13.4 | 32.6 | 45.0 | 14.5–13.4 | 35.9 | 45.0 |
| | 460 | 60 | Three | 6.7 | 15.1 | 20.0 | 6.7 | 16.6 | 20.0 |
| | 575 | 60 | Three | 5.3 | 11.9 | 15.0 | 5.3 | 13.1 | 15.0 |

# HE3XINV ENERGY RECOVERY VENTILATOR

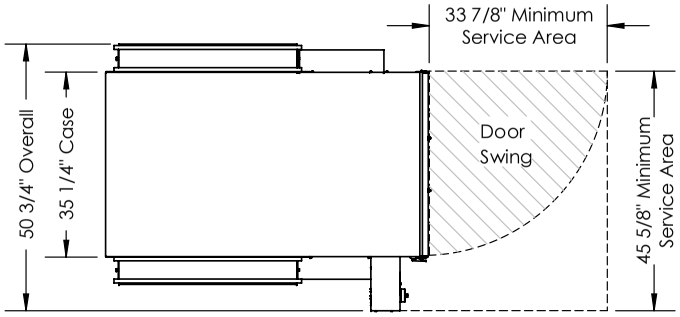


TOP VIEW

**ABBREVIATION**
EA: Exhaust Air to outside
OA: Outside Air intake
RA: Room Air to be exhausted
FA: Fresh Air to inside

**INSTALLATION ORIENTATION**
Unit must be installed in orientation shown.

**NOTE:**
1. UNLESS OTHERWISE SPECIFIED, DIMENSIONS ARE ROUNDED TO THE NEAREST EIGHTH OF AN INCH.

2. SPECIFICATIONS MAY BE SUBJECT TO CHANGE WITHOUT NOTICE.

3. MIN. DUCT CLEARANCE FROM DAMPER BLADES WHEN FULLY OPENED TO BE 2". SMACNA RULES APPLY.

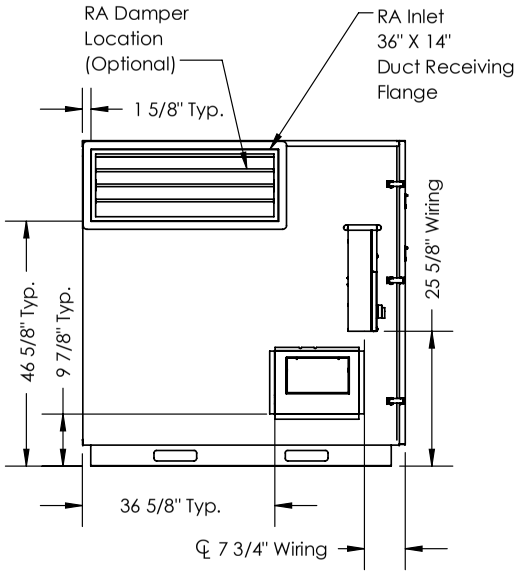


LEFT VIEW

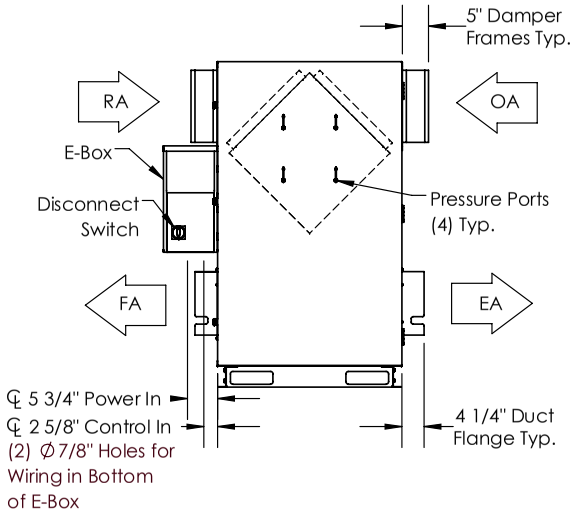


FRONT VIEW

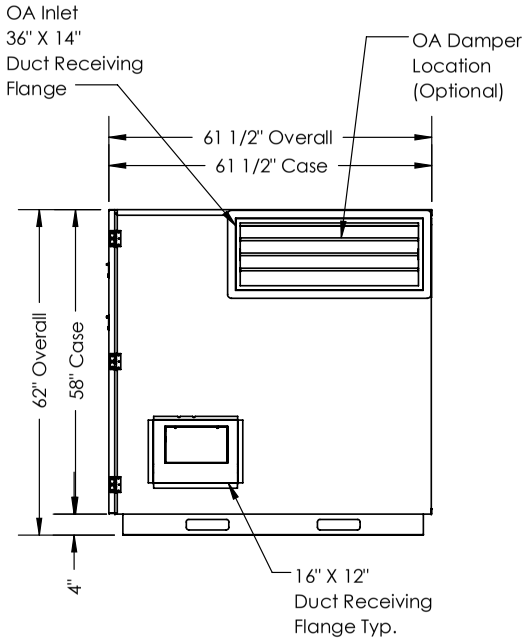


RIGHT VIEW

## AIRFLOW ORIENTATION

Available as shown in dimension drawing.

## UNIT MOUNTING & APPLICATION

Must be mounted as shown. RA/EA airstream can be switched with OA/FA airstream unless certain options are selected.

# HE3XINV ENERGY RECOVERY VENTILATOR WITH BYPASS ECONOMIZER

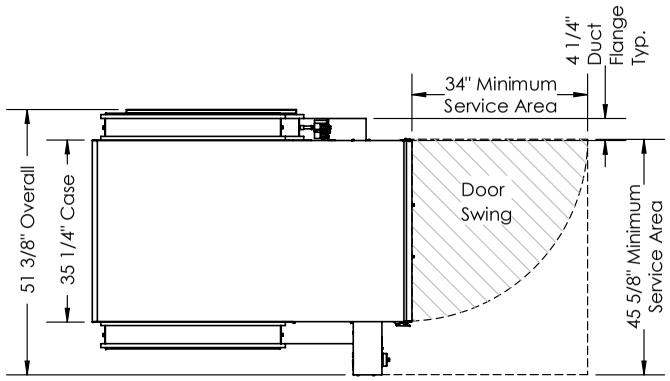


TOP VIEW

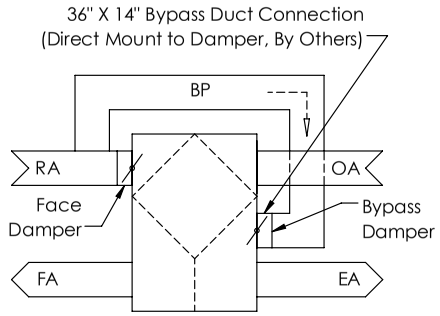


BYPASS AIRFLOW SCHEMATIC
FRONT VIEW

**ABBREVIATIONS**
EA: Exhaust Air to outside
OA: Outside Air intake
RA: Room Air to be exhausted
FA: Fresh Air to inside
BP: Bypass Air Intake

**INSTALLATION ORIENTATION**
Unit must be installed in orientation shown.

**NOTE**
1. UNLESS OTHERWISE SPECIFIED, DIMENSIONS ARE ROUNDED TO THE NEAREST EIGHTH OF AN INCH.

2. SPECIFICATIONS MAY BE SUBJECT TO CHANGE WITHOUT NOTICE.

3. MIN. DUCT CLEARANCE FROM DAMPER BLADE WHEN FULLY OPENED TO BE 2". SMACNA RULES APPLY.

4. UNITS WITH BYPASS WILL REQUIRE ADDITIONAL SPACE FOR THE CONNECTION OF THE BYPASS DUCT (BY OTHERS).

5. FOR INSTALLATION DETAILS, REFER TO I&O MANUAL SUPPLEMENT FOR BYPASS.

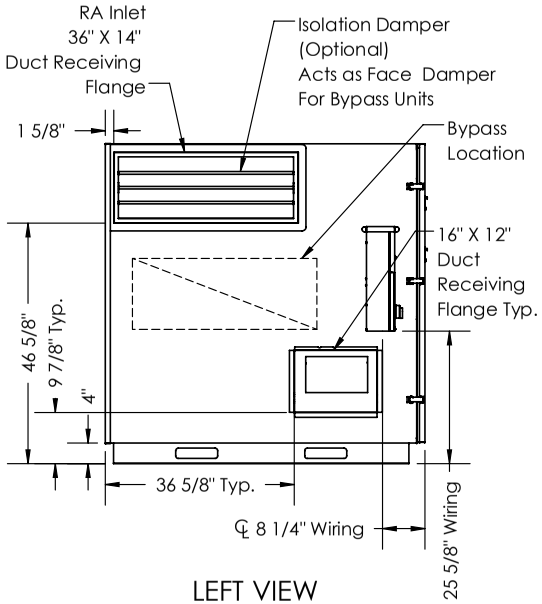


LEFT VIEW

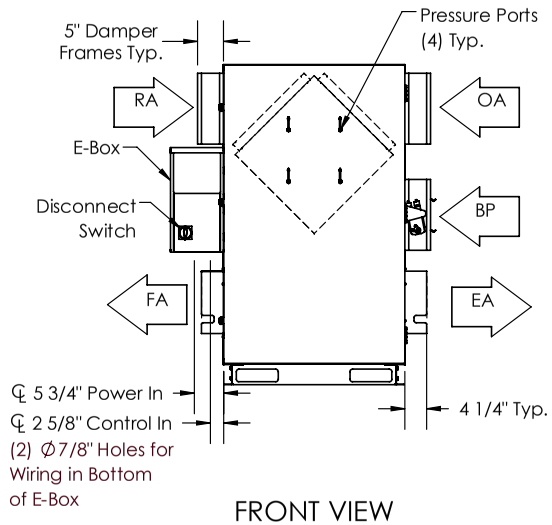


FRONT VIEW

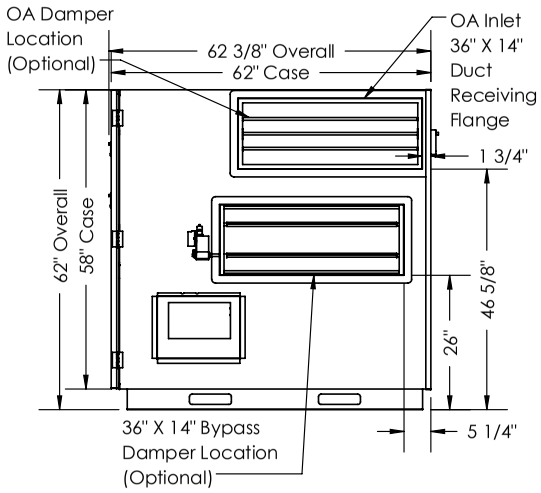


RIGHT VIEW

## AIRFLOW ORIENTATION

Available as shown in dimension drawing.

## UNIT MOUNTING & APPLICATION

Must be mounted as shown. Airstreams cannot be switched.