HE 3XRT

ENERGY RECOVERY VENTILATOR

c UL us LISTED DUCTED HEAT RECOVERY VENTILATOR 89S5

ROOFTOP UNIT

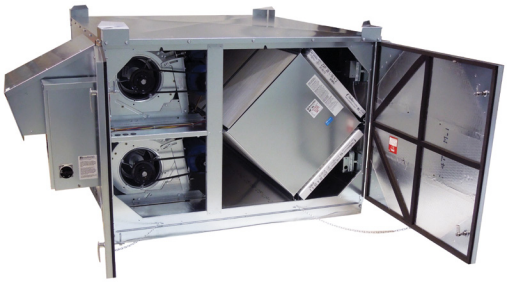

Energy recovery core is AHRI Certified®

AHRI CERTIFIED® www.ahridirectory.org
Air-to-Air ERV
AHRI Standard 1060
Energy Recovery COMPONENT is certified. Actual performance in packaged equipment may vary.

SPECIFICATIONS

Ventilation Type:
Static plate, heat and humidity transfer

Airflow Range: 750–3,300 CFM

AHRI 1060 Certified Core: Three L125-G5

Standard Features:
TEFC Premium efficiency motors
Motor starters
Non-fused disconnect
24VAC transformer/relay package
Cross-core differential pressure ports

Filters:
Total qty. 6, MERV 8: 20" x 20" x 2"

Unit Weight:
656–972 lbs., varies by option(s)

Max. Shipping Dimensions & Weight (on pallet):
80" L x 70" W x 67" H
1,067 lbs.

Motor(s):
Qty. 2, Belt drive blower/standard motor packages with adjustable sheaves (see table below)

Options:
Onboard variable frequency drives (VFDs): both airstreams
Shaft grounding ring on motors with VFDs
Fused disconnect
Integrated programmable controls: enhanced, premium
Class 1 low leakage motorized isolation dampers: OA, RA or both airstreams
Factory mounted filter alarms: both airstreams
Double wall construction
Exterior paint: white, custom colors

Accessories:
Filters: MERV 13, 2" (shipped loose)
Automatic balancing damper: 4", 5", 6"
Roof curb: standard 14"
Curb wind clip
Engineered combo curb for Trane or Carrier RTUs
Digital time clock: wall mount (TC7D-W), in exterior enclosure (TC7D-E)
Carbon dioxide sensor/control: wall mount (CO2-W), duct mount (CO2-D)
IAQ sensor: wall mount (IAQ-W), duct mount (IAQ-D)
Motion occupancy sensor/control: ceiling mount (MC-C), wall mount (MC-W)
Smoke detector: duct mount (SD-D)
BACnet fan control: wall mount (BACNETFC-W)
Indoor electric duct heater: EK series (1–175 kW);
Indirect gas-fired duct furnace: GH series (50–400 MBH); Installed downstream of any fans

AIRFLOW PERFORMANCE

Motor HP	Blower RPM	Sheave Adj. Turns Open	External Static Pressure (Inches Water Column)													
			0.00		0.25		0.50		0.75		1.00		1.25		1.50	
			SCFM	BHP	SCFM	BHP	SCFM	BHP	SCFM	BHP	SCFM	BHP	SCFM	BHP	SCFM	BHP
2.0	1207	4	2130	1.0	1940	0.8	1695	0.6	1340	0.4						
	1347	2	2380	1.4	2210	1.2	2005	1.0	1725	0.8	1365	0.5				
	1488	0	2630	1.9	2470	1.6	2300	1.4	2100	1.2	1800	0.9	1435	0.7	820	0.4
3.0	1533	3	2790	2.5	2660	2.3	2500	2.1	2290	1.8	2040	1.6	1765	1.3	1265	1.0
	1597	2	2905	2.8	2785	2.6	2630	2.4	2340	2.1	2200	1.9	1955	1.6	1640	1.3
	1661	0.5			2810	3.0	2760	2.7	2585	2.5	2365	2.2	2140	1.9	1890	1.6
	1692	0					2820	2.9	2665	2.7	2450	2.4	2220	2.1	1980	1.8
5.0	1686	3	3110	3.5	3000	3.2	2890	3.0	2730	2.7	2520	2.4	2295	2.1	2000	1.8
	1764	1.5	3255	4.0	3150	3.7	3045	3.5	2905	3.2	2720	2.9	2520	2.5	2270	2.2
	1843	0			3300	4.2	3200	4.0	3075	3.7	2910	3.4	2715	3.0	2500	2.7

Operation in this zone will likely exceed FLA limits.

Operation in this zone outside of core airflow limits.

Note: Brake horsepower (BHP) is for one blower motor package only. Airflow performance includes effect of clean, standard filter supplied with unit.

ELECTRICAL DATA

Standard Electrical Specifications							Optional Factory Installed VFD Electrical Specifications		
HP	Volts	Hz	Phase	FLA per motor	Min. Cir. Amps	Max. Overcurrent Protection Device	FLA per motor	Min. Cir. Amps	Max. Overcurrent Protection Device
2.0	120	60	Single	20.0	45.0	60.0			
2.0	208–230	60	Single	10.8–10.0	24.3	35.0	6.6–5.8	28.3	30.0
	208–230	60	Three	6.6–5.8	14.9	20.0	6.6–5.8	16.3	20.0
	460	60	Three	2.9	6.5	15.0	2.9	7.2	15.0
	575	60	Three	2.4	5.4	15.0	2.4	5.9	15.0
3.0	208–230	60	Single	14.7–14	33.1	40.0	9.4–8.5	40.2	45.0
	208–230	60	Three	9.4–8.5	21.1	25.0	9.4–8.5	23.2	25.0
	460	60	Three	4.2	9.5	15.0	4.2	10.5	15.0
	575	60	Three	3.3	7.4	15.0	3.3	8.2	15.0
5.0	208–230	60	Three	14.5–13.4	32.6	45.0	14.5–13.4	35.9	45.0
	460	60	Three	6.7	15.1	20.0	6.7	16.6	20.0
	575	60	Three	5.3	11.9	15.0	5.3	13.1	15.0

HE3XRT (RTV/RTR) ENERGY RECOVERY VENTILATOR

ABBREVIATIONS
EA: Exhaust Air to outside
OA: Outside Air intake
RA: Room Air to be exhausted
FA: Fresh Air to inside
RTV: Rooftop Vertical RA & FA
RTR: Rooftop Vertical RA Only

INSTALLATION ORIENTATION
Unit must be installed in orientation shown.

NOTE:
1. UNLESS OTHERWISE SPECIFIED, DIMENSIONS ARE ROUNDED TO THE NEAREST EIGHTH OF AN INCH.
2. SPECIFICATIONS MAY BE SUBJECT TO CHANGE WITHOUT NOTICE.

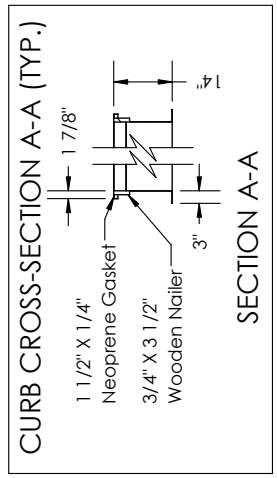

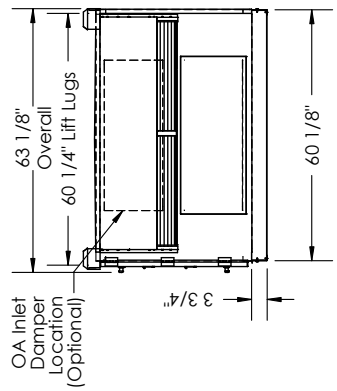

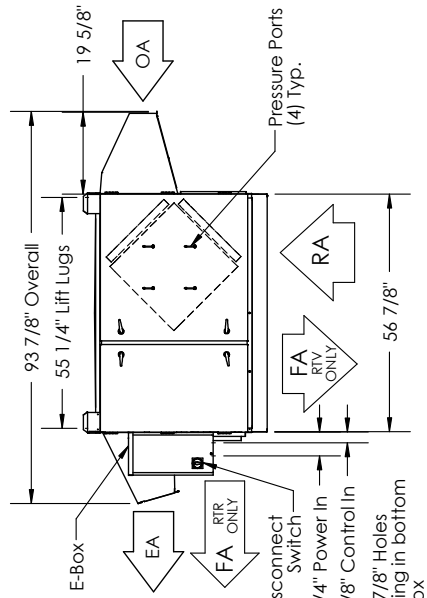

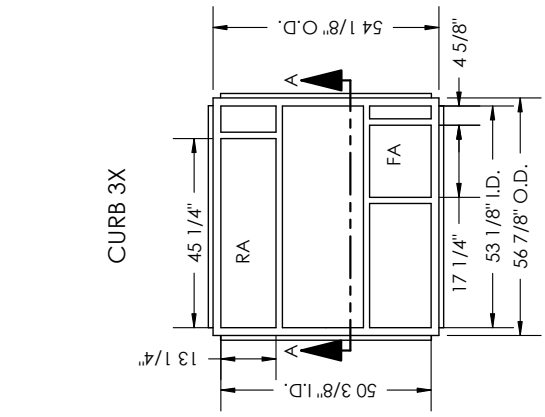

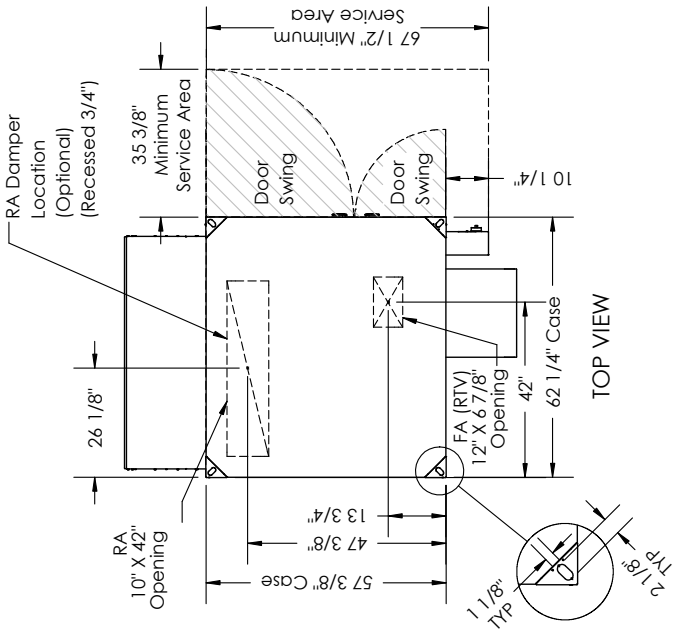

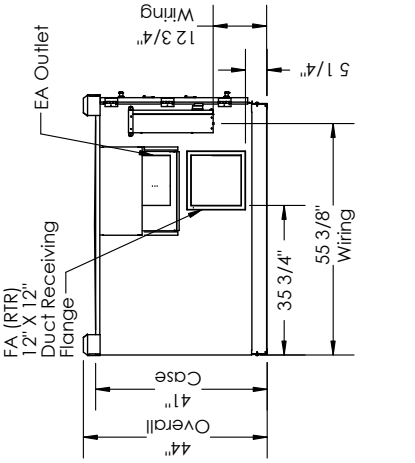

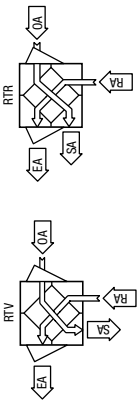

UNIT MOUNTING & APPLICATION
Must be mounted as shown. Airstreams cannot be switched.

AIRFLOW ORIENTATION
Available as shown:

HE3XRT (RTH/RTF) ENERGY RECOVERY VENTILATOR

ABBREVIATIONS
EA: Exhaust Air to outside
OA: Outside Air intake
RA: Room Air to be exhausted
FA: Fresh Air to inside
RTF: Rooftop Vertical FA Only
RTH: Rooftop Horizontal RA & FA

INSTALLATION ORIENTATION
Unit must be installed in orientation shown.

NOTE:
1. UNLESS OTHERWISE SPECIFIED, DIMENSIONS ARE ROUNDED TO THE NEAREST EIGHTH OF AN INCH.
2. SPECIFICATIONS MAY BE SUBJECT TO CHANGE WITHOUT NOTICE.

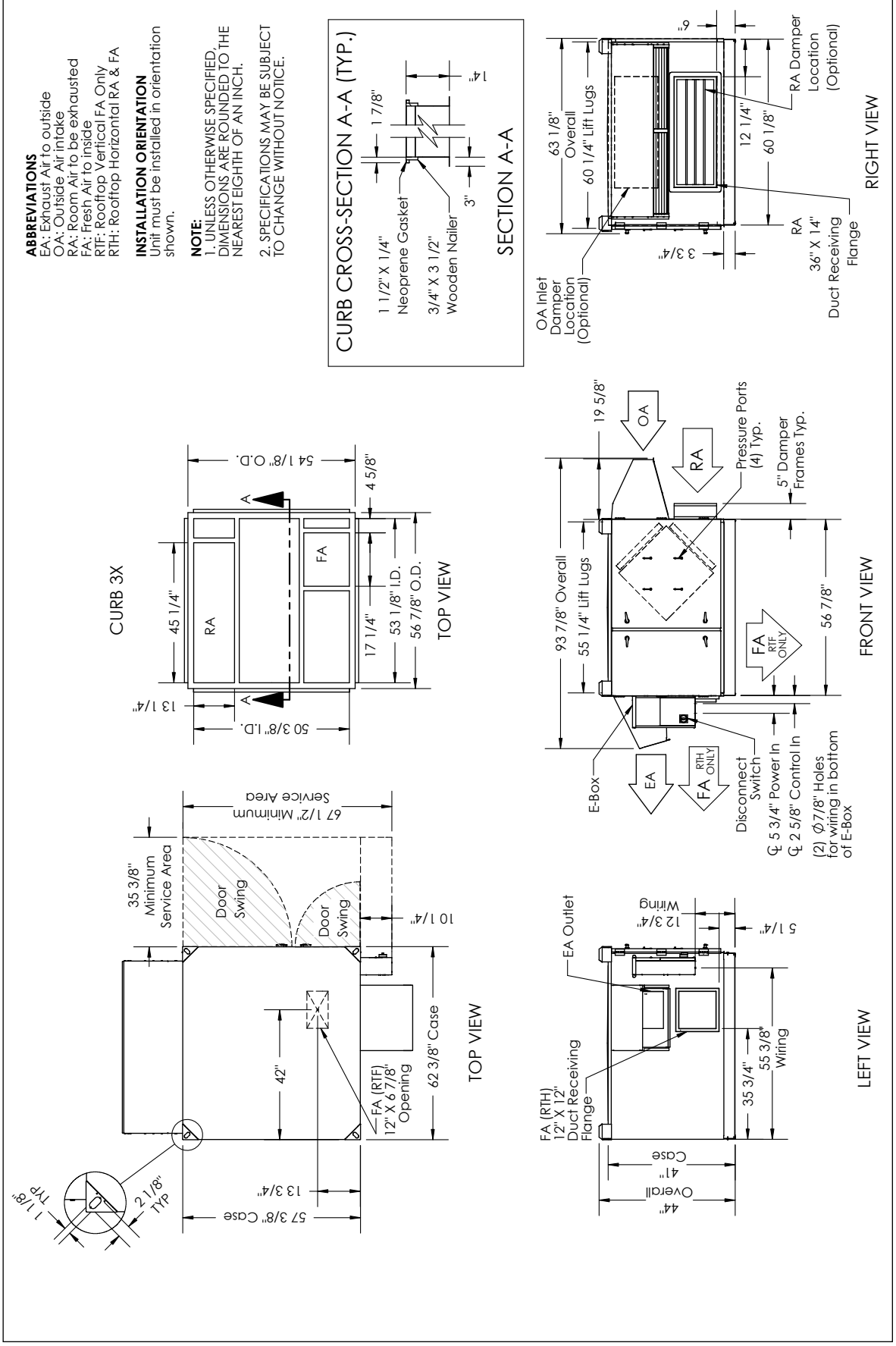

UNIT MOUNTING & APPLICATION
Must be mounted as shown. Airstreams cannot be switched.

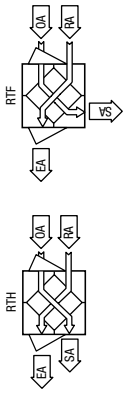

AIRFLOW ORIENTATION
Available as shown: