HE 6XIN

ENERGY RECOVERY VENTILATOR

INDOOR UNIT

Energy recovery core is AHRI Certified®

AHRI CERTIFIED®
www.ahridirectory.org
Air-to-Air ERV
AHRI Standard 1060
Energy Recovery COMPONENT is certified. Actual performance in packaged equipment may vary.

SPECIFICATIONS

Ventilation Type:
Static plate, heat and humidity transfer

Airflow Range: 1,500–6,600 CFM

AHRI 1060 Certified Core: Six L125-G5

Standard Features:
TEFC Premium efficiency motors
Motor starters
Non-fused disconnect
24VAC transformer/relay package
Cross-core differential pressure ports

Filters:
Total qty. 12, MERV 8: 20" x 20" x 2"

Unit Weight:
2,235–3,099 lbs., varies by option(s)

Max. Shipping Dimensions & Weight (on pallet):
116" L x 90" W x 90" H
3,439 lbs.

Motor(s):
Qty. 2, Belt drive blower/standard motor packages with adjustable sheaves

Options:
Onboard variable frequency drives (VFDs): both airstreams
Shaft grounding ring on motors with VFDs
Fused disconnect
Integrated programmable controls: enhanced, premium
Bypass economizer damper (see DIM drawing): dry-bulb temperature controls (standard), enthalpy controls (option)
Class 1 low leakage motorized isolation dampers: OA, EA or both airstreams
Factory mounted filter alarms: both airstreams
Double wall construction
Exterior paint: white, custom colors

Accessories:
Filters: MERV 13, 2" (shipped loose)
Automatic balancing damper: 4", 5", 6"
Digital time clock: wall mount (TC7D-W), in exterior enclosure (TC7D-E)
Carbon dioxide sensor/control: wall mount (CO2-W), duct mount (CO2-D)
IAQ sensor: wall mount (IAQ-W), duct mount (IAQ-D)
Motion occupancy sensor/control: ceiling mount (MC-C), wall mount (MC-W)
Smoke detector: duct mount (SD-D)
BACnet fan control: wall mount (BACNETFC-W)
Indoor electric duct heater: EK series (1–175 kW)
Indirect gas-fired duct furnace: GH series (50–400 MBH); Installed downstream of any fans

AIRFLOW PERFORMANCE

Blower RPM	External Static Pressure (Inches Water Column)																			
	0.25		0.50		0.75		1.00		1.25		1.50		1.75		2.00		2.25		2.50	
	SCFM	BHP	SCFM	BHP	SCFM	BHP	SCFM	BHP	SCFM	BHP	SCFM	BHP	SCFM	BHP	SCFM	BHP	SCFM	BHP	SCFM	BHP
900	2836	1.2	2493	1.2	1855	1.1														
1000	3310	1.4	3067	1.3	2766	1.3	2356	1.2	1641	1.0										
1100	3746	1.8	3505	1.7	3226	1.6	2891	1.5	2464	1.4	1843	1.3								
1200	4277	2.4	4005	2.3	3698	2.1	3345	2.0	2924	1.9	2397	1.8	1684	1.6						
1300	4976	3.0	4665	2.9	4315	2.8	3910	2.7	3430	2.5	2847	2.4	2137	2.2						
1400	5689	3.7	5396	3.6	5058	3.5	4651	3.3	4143	3.2	3479	3.1	2612	3.0	1731	2.8				
1500	6096	4.2	5866	4.2	5601	4.1	5285	4.0	4892	3.9	4355	3.8	3488	3.7	2254	3.6				
1600	6267	4.8	6083	4.7	5876	4.7	5638	4.6	5354	4.6	4996	4.5	4489	4.5	3528	4.4	2072	4.3		
1700	6415	5.5	6255	5.4	6080	5.4	5884	5.3	5658	5.3	5391	5.2	5055	5.2	4589	5.2	3724	5.2	2256	5.1
1800			6578	6.3	6415	6.3	6234	6.2	6033	6.2	5803	6.1	5531	6.1	5198	6.0	4752	6.0	4045	5.9
1900													6442	7.2	6110	7.2	5705	7.1	5183	7.0

Operation in this zone will likely exceed FLA limits.

Operation in this zone outside of core airflow limits.

Note: Brake horsepower (BHP) is for one blower motor package only. Airflow performance includes effect of clean, standard filter supplied with unit. For full operating range, see *CORES*.

ELECTRICAL DATA

Standard Electrical Specifications							Optional Factory Installed VFD Electrical Specifications		
HP	Volts	Hz	Phase	FLA per motor	Min. Cir. Amps	Max. Overcurrent Protection Device	FLA per motor	Min. Cir. Amps	Max. Overcurrent Protection Device
5.0	208–230	60	Three	14.5–13.4	32.6	45	14.5–13.4	35.9	45
	460	60	Three	6.7	15.1	20	6.7	16.6	20
	575	60	Three	5.3	11.9	15	5.3	13.1	15
7.5	208–230	60	Three	21.0–19.0	47.3	60	21.0–19.0	52.0	60
	460	60	Three	9.5	21.4	25	9.5	23.5	25
	575	60	Three	7.6	17.1	20	7.6	18.8	20

HE6XIN ENERGY RECOVERY VENTILATOR

ABBREVIATIONS
EA: Exhaust Air to outside
OA: Outside Air intake
RA: Room Air to be exhausted
FA: Fresh Air to inside

INSTALLATION ORIENTATION
Unit must be installed in orientation shown.

NOTE
1.ALL UNITS HAVE INTERNAL EA BACKDRAFT DAMPER. UNLESS AN EA MOTORIZED ISOLATION DAMPER IS SPECIFIED.

2.UNLESS OTHERWISE SPECIFIED, DIMENSIONS ARE ROUNDED TO THE NEAREST EIGHTH OF AN INCH.

3.SPECIFICATIONS MAY BE SUBJECT TO CHANGE WITHOUT NOTICE.

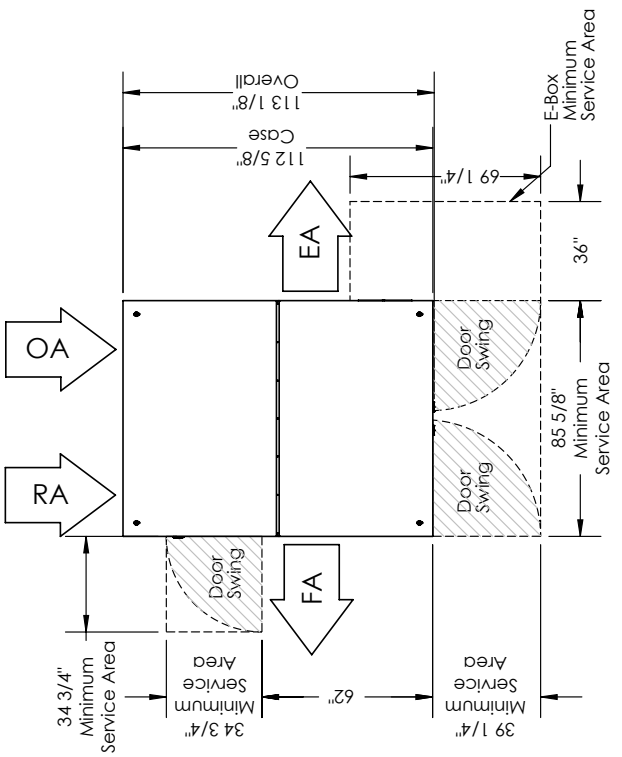

TOP VIEW

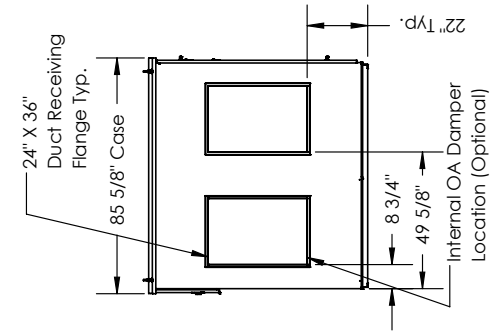

BACK VIEW

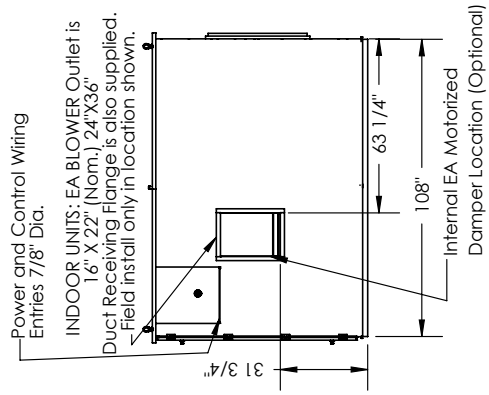

RIGHT VIEW

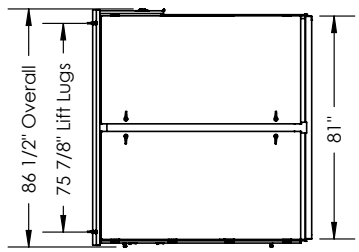

FRONT VIEW

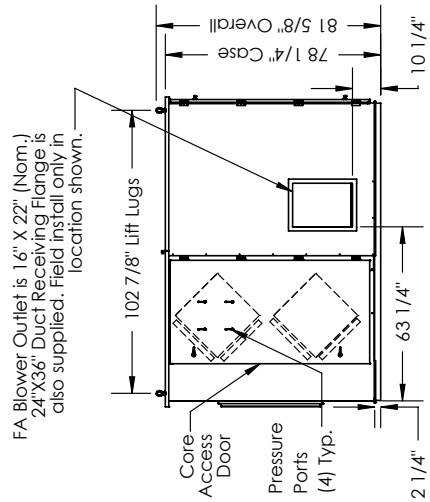

LEFT VIEW

UNIT MOUNTING & APPLICATION
Must be mounted as shown. Airstreams cannot be switched.

AIRFLOW ORIENTATION
Available as shown in dimension drawing.

HE6XIN ENERGY RECOVERY VENTILATOR WITH BYPASS ECONOMIZER

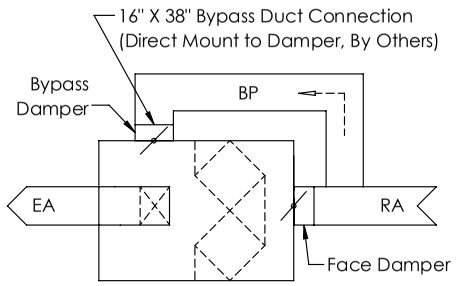

BYPASS AIRFLOW SCHEMATIC
RIGHT VIEW
(OA/FA Airstream Not Shown)

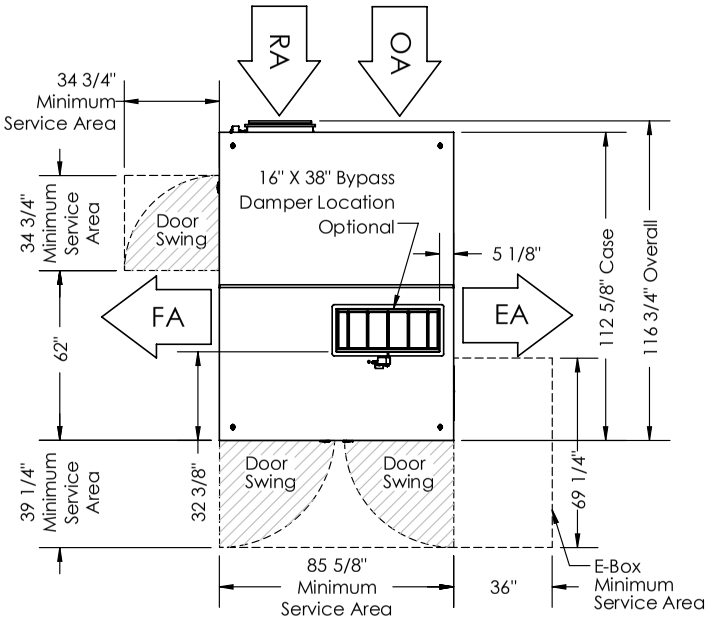

TOP VIEW

ABBREVIATIONS
EA: Exhaust Air to outside
OA: Outside Air intake
RA: Room Air to be exhausted
FA: Fresh Air to inside
BP: Bypass Air Intake

INSTALLATION ORIENTATION
Unit must be installed in orientation shown.

NOTE
1.ALL UNITS HAVE INTERNAL EA BACKDRAFT DAMPER. UNLESS AN EA MOTORIZED ISOLATION DAMPER IS SPECIFIED.

2.UNLESS OTHERWISE SPECIFIED, DIMENSIONS ARE ROUNDED TO THE NEAREST EIGHTH OF AN INCH.

3.SPECIFICATIONS MAY BE SUBJECT TO CHANGE WITHOUT NOTICE.

4. DAMPER SWINGS IN DIRECTION OF AIRFLOW. MIN. DUCT CLEARANCE FROM DAMPER BLADE WHEN FULLY OPENED TO BE 2". SMACNA RULES APPLY.

5. UNITS WITH BYPASS WILL REQUIRE ADDITIONAL SPACE FOR THE CONNECTION OF THE BYPASS DUCT (BY OTHERS).

6. FOR INSTALLATION DETAILS, REFER TO I&O MANUAL SUPPLEMENT FOR BYPASS.

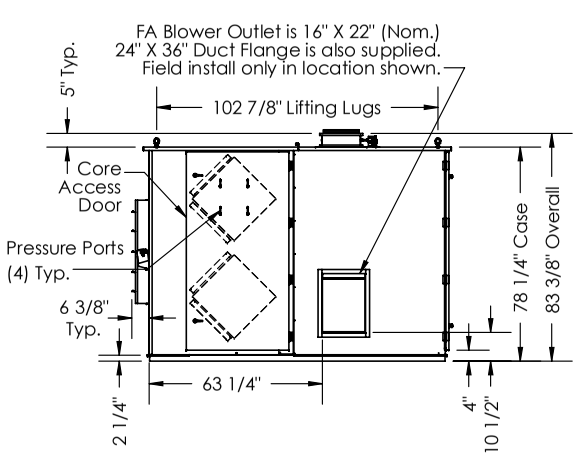

LEFT VIEW

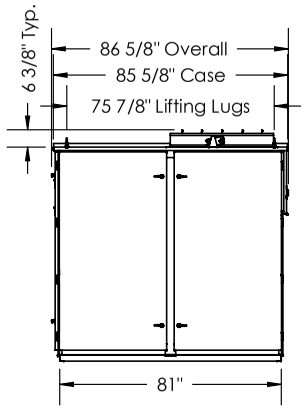

FRONT VIEW

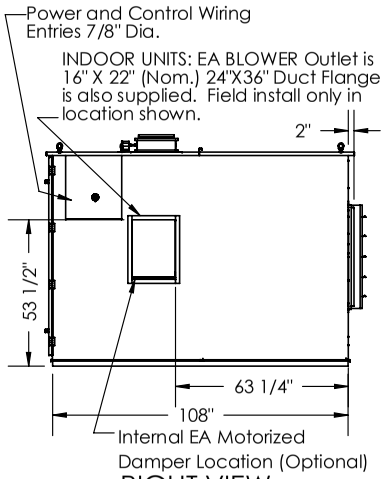

RIGHT VIEW

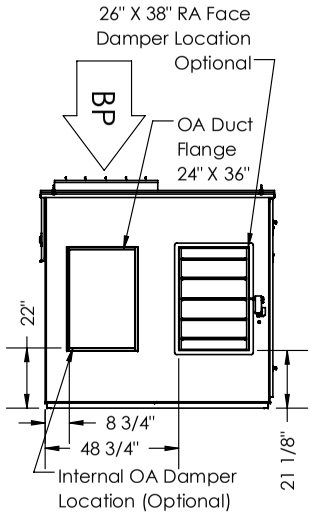

BACK VIEW

AIRFLOW ORIENTATION
Available as shown in dimension drawing.

UNIT MOUNTING & APPLICATION
Must be mounted as shown. Airstreams cannot be switched.